US Army Corps of Engineers®

PUBLIC NOTICE

Applicant:
Megan Statts
Hawaii DLNR

Published: July 2, 2025
Expires: August 1, 2025

Honolulu District
Permit Application No. POH-2024-00105

TO WHOM IT MAY CONCERN: The Honolulu District of the U.S. Army Corps of Engineers (Corps) has received an application for a Department of the Army permit pursuant to Section 404 of the Clean Water Act (33 U.S.C. §1344) and Section 10 of the Rivers and Harbors Act of 1899 (33 U.S.C. §403). The purpose of this public notice is to solicit comments from the public regarding the work described below:

APPLICANT: Megan Statts
Hawaii Department of Land and Natural Resources
4 Sand Island Access Road
Honolulu, HI 96819

AGENT: James (Jim) Hayes
Planning Solutions, Incorporated
Pacific Park Plaza,
711 Kapiolani Boulevard, Suite 950
Honolulu, HI 96813

WATERWAY AND LOCATION: The project would affect waters of the United States and navigable waters of the United States associated with the Pacific Ocean. The project/review area is the Kikiaola Small Boat Harbor (SBH), located on the south side of Kaumualii Highway, 400 feet west of the intersection with Kekaha Road, at Latitude 21.95907º and Longitude -159.69163º; TMK (4) 1-2-006:017, on Waimea Bay, Kekaha, Island of Kauai, Hawaii.

EXISTING CONDITIONS: There are only four state boat launches on the Island of Kauai and the Kikiaola SBH is most westerly one. This means that the Kikiaola SBH is the best way to access the offshore resources along the Na Pali Coast of Kauai. This launch is used by recreational vessels including fishing boats and pleasure craft, as well as commercial sightseeing vessels. The large volume of vessel traffic has exceeded the capacities of existing facilities, resulting in substantial wait times for those wishing to access the nearby offshore recreational resources.

The Kikiaola SBH was originally developed by the State of Hawaii in 1959, it included a boat ramp, dock, and one breakwater which now forms the western edge of the boat basin. In 2009 an Army Corps of Engineers, Civil Works Federal project added to the Kikiaola SBH. The Federal project modified an existing harbor and consisted of

dredging a 725-foot-long entrance channel varying in width from 95 to 205 feet with a depth of 11 feet; dredging a 320-foot-long access channel varying in width from 70 to 95 feet with a depth of 7 feet; an east breakwater 1,056 feet long with a maximum crest elevation of 12 feet; and a west breakwater 610 feet long with a maximum crest elevation of 8 feet. These navigation improvements were designed to eliminate dangerous breaking wave conditions within the entrance channel and allow for the safe passage of vessels entering the basin. The three breakwaters provide a distinct separation of the inner harbor area from the Pacific Ocean.

PROJECT PURPOSE:

Basic: To improve the facilities at the Kikiaola SBH to reduce congestion at the existing boat ramp, provide safe means to load and unload boats, and increase the long-term resiliency.

Overall: This project would add a new secondary ramp and floating docks to the existing Kikiaola SBH facilities. The new ramp would allow for easier launching of the larger vessels using the facilities as well as making for faster to launching and retrieving of recreation boats, thus reducing wait times. The addition floating docks would provide a safe way for the users to load and unload boats, as well as increasing resiliency of the facilities to sea level rise and storm events by adapting to changing water levels, as well as minimizing structural stress during storm events.

PROPOSED WORK: The applicant requests authorization to construct a new boat ramp and install two new floating docks within Kikiaola SBH, as shown in the attached drawings. All construction equipment will be land based. Some portions of the equipment, such as the excavator bucket, will extend into the water temporarily. The project would involve the following work, discharges of fill into Waters of the U.S. and alterations to submerged lands.

An approximately 3,760 square foot area, 47 feet wide and extending 80 feet seaward from the existing concrete rock missionary dock wall would be surrounded by steel sheet piles, except on the land side where the concrete rock and masonry dock wall exists. The construction area would be surrounded by a turbidity curtain to reduce the potential turbidity within the harbor basin. The top of the sheet piles would extend out of the water and allow for the area within the sheet piles to be excavated and backfilled further reducing the possibility of increased turbidity within the harbor basin. The material within the sheet piles would be excavated (dredged) until the underlying reef limestone layer is encountered (roughly 11 feet below the mean low-low water level). After excavation, boulder fill would be placed within the sheet piles area to a desired level and then a roughly 6-inch-thick layer of #3 crushed stone would be placed on top of the boulder fill to provide a stable surface to install the precast concrete boat ramp. Geotextile cloth will be used as appropriate.

Six (three per side) fully encased 18-inch diameter drilled shaft piles would be installed to support/guide floating docks. Four of the piles would be placed within the sheet pile stabilized area and would be installed prior to backfilling activities, the two additional piles would be placed seaward of the stabilized area. Two (one per side) fully encased 24-inch diameter drilled shaft piles would be installed to support the abutment foundations which serve as a landside connection points to the floating docks.

A 30-foot wide by 80 feet long (2,400 square foot) precast concrete boat ramp would be placed within a portion of the stabilized area. Prior to setting the precast concrete, a leveling frame (6-inch-diameter galvanized pipes) will be placed on the stone layer.

Cast-in-place underwater concrete would be placed (cast-in-place) within the stabilized area via the 2-inch-diameter grout injection holes in the precast concrete ramp elements and into the 7-foot-wide open areas on both sides of the precast concrete ramp. The concrete would fill the leveling frame area below the precast concrete elements and the open areas on both sides of it.

The docks would be 7 feet wide by 100 feet long, floating, prefabricated aluminum framed loading docks with plastic lumber fenders and decking on both sides of the ramp.

The new boat ramp would not require the alteration of existing harbor facilities (e.g., existing ramp, dock, and breakwaters) in contact with Waters of the United States. The project would result in a total permanent fill of approximately 1,284 cubic yards (cy) of various materials (see Table 1 below), discharged into the 3,760 square foot stabilized area within the sheet piles. The project would also result in a temporary discharge of approximately 27cy of various materials (see Table 2 below), discharged into the 10 square foot of waters of the US. At the end of construction, the sheet piles would be cut off at the surface of the substrate and the turbidity curtain would be removed.

The applicant is also proposing to replace a section of the existing boat ramp where it is damaged as shown in Drawing C-201 on Sheet 7, and Drawing S-302 on Sheet 32. The existing boat ramp would be surrounded by a turbidity curtain and the work area would be further isolated from the marine environment using a filter fabric wrapped sandbag wall. The section to be replaced is 7 feet wide by 17 feet long. Work associated with this repair would consist of using a concrete saw to cut a clean edge around the existing damaged area, the damaged concrete would be removed, the area would be regraded with six inches of 1.5-inch clean rock to support the new concrete, rebar would be drilled into the existing concrete and epoxied into place, and then concrete would be poured in to fill the hole. This would result in the permanent discharge of a combined amount of 2 cy of rock and concrete to facilitate the repair. The applicant is proposing to do this work in association with the installation of the new boat ramp and docks as the crew would be on site with all the equipment, this would reduce disturbance as a separate crew would have to deploy, stage equipment, conduct the work, and then demobilize.

Table 1: List of the Materials, Number, Length, Width, Area, and Volume of materials which would be permanently discharged as fill as part of this project.

Material	Number	Length (feet)	Width (feet)	Area (square feet)	Volume (cubic yards)
Steel sheet piles with epoxypolyamide marine coating	Around 3 sides of perimeter	204 linear feet	0.125	26	10
Bedding consisting of a geotextile liner with surge rock and #1 course rock fill with a 6inch thick layer of #3 crushed stone.	1 area within the sheet pile perimeter	80	47	3,760	1,115
6-inch diameter galvanized pipes for leveling platform	18 pipes	540 linear feet	0.5	540	20
Precast concrete ramp	1 area within the sheet pile perimeter	80	30	2,400	50
Nylon grout bags and Cast-in-place underwater concrete	1 area within the sheet pile perimeter	80	47	3,760	25 (some of the area is already occupied by precast concrete and leveling platform)
Fully encased drilled shaft piles	6	NA	0.75’ radius	11	12
Fully encased drilled shaft piles	2	NA	1’ radius	6	7
Drain rock (associated with repair of existing boat ramp)	1	7	14	98	2
Underwater concrete and rebar (associated with repair of existing boat ramp)	1	7	14	98	2

Table 2: List of the Materials, Number, Length, Width, Area, and Volume of materials which would be temporarily discharged as fill as part of this project.

Material	Number	Length (feet)	Width (feet)	Area (square feet)	Volume (cubic yards)
BMP: full-depth Type 2 DOT Turbidity curtain (PVC coated polyester) – used during both new and existing boat ramp work	1	300 linear feet	0.5 (with float)	150	2
Falsework to guide installation of sheet piles and fully encased drilled shaft piles. Falsework consists of four vertical steel beams with horizontal steel beams as needed.	1	Beams will be roughly 10 feet in length	Each beam will be roughly 1.5 feet wide	9.4	9.8
BMP: Filter fabric wrapped sandbag wall – used during existing boat ramp repair only	1	45	3	135	15

AVOIDANCE AND MINIMIZATION: The applicant has provided the following information in support of efforts to avoid and/or minimize impacts to the aquatic environment:

To avoid impact the applicant is proposing to locate the new facilities within the Kikiaola SBH basin, which would minimize the need for maintenance dredging in an additional location as the area is already maintained for navigability. Additionally, the Kikiaola SBH basin does not require frequent dredging, the last time the boat basin was dredged was 2018. The shore-based facilities at the Kikiaola SBH are currently sufficient to support the secondary boat ramp, thus there is no need to expand onshore facilities

such as bathrooms or parking lots. The addition of a second boat ramp is not expected to result a significant increase in overall usage of the Kikiaola SBH.

To minimize the work which could be associated with the construction and maintenance of a new boat ramp, the location was selected to allow for construction of the maximum allowable ramp slope of 15% to limit the footprint of the project area. The project area is within the existing Kikiaola SBH boat basin and there are no special aquatic sites within the boat basin. There would be no riparian areas affected as part of this project.

To minimize possible environmental impacts during the construction activities, the contractor would employ in-water and land-side Best Management Practices (BMPs) while performing all work associated with the construction of the proposed boat ramp and docks. In-water BMP would require the use of a Type 2 DOT Turbidity Curtain. The landside BMPs would include the stabilizing of the construction entrance to minimize material entering the work area, drying of dredged sediments and stockpiling of material in an area removed from the shoreline, and use of Storm water management BMPs, use of filter socks on the downgradient side of the site and stockpile area to minimize sediment transportation by surface runoff. The BMPs are depicted in detail in the project drawings on Sheets 5 through 7, and in the Notes on Sheets 3 and 4, and would be implemented as part of the permit conditions.

COMPENSATORY MITIGATION: The applicant has provided the following explanation why compensatory mitigation should not be required:

The impacts associated with the project would be minimized to the greatest extent practicable, while still meeting the need of the project. Additionally, there is no loss of waters of the U.S. as the fill associated with the project are to ensure a stable boat ramp, and the rest of the project components are a structure within Section 10 waters. For these reasons, the applicant stats that compensatory mitigation should not be required.

CULTURAL RESOURCES: The Corps is evaluating the undertaking for effects to historic properties as required under Section 106 of the National Historic Preservation Act. This public notice serves to inform the public of the proposed undertaking and invites comments including those from local, State, and Federal government Agencies with respect to historic resources. Our final determination relative to historic resource impacts may be subject to additional coordination with the State Historic Preservation Officer, federally recognized tribes and other interested parties.

The District Engineer's final eligibility and effect determination will be based upon coordination with the SHPD, as appropriate and required, and with full consideration given to the proposed undertaking's potential direct and indirect effects on historic properties within the Corps-identified permit area.

ENDANGERED SPECIES: The Corps has performed an initial review of the application, the U.S. Fish and Wildlife Service (USFWS) Information for Planning and Consultation (IPaC), and the National Marine Fisheries Service (NMFS) ESA Critical Habitat Mapper to determine if any threatened, endangered, proposed, or candidate species, as well as the proposed and final designated critical habitat may occur within the action area of the proposed project. Based on this initial review, the Corps has made a preliminary determination that the proposed project may affect species and critical habitat under NMFS jurisdiction listed in Table 3 and USFWS jurisdiction listed in Table 4 below. No other ESA-listed species or critical habitat will be affected by the proposed action.

Table 3: ESA-listed species and critical habitat under NMFS jurisdiction potentially present in the action area.

Species and Critical Habitat Under NMFS Jurisdiction	**ESA Listing Designation**	**Effect Determination**
Green Sea Turtle, Central North Pacific DPS (*Chelonia mydas*)	Threatened	May affect, not likely to adversely affect
Green Sea Turtle, Central North Pacific DPS, Proposed Critical habitat (*Chelonia mydas*)	Critical Habitat	May affect, not likely to adversely affect
Hawksbill Turtle (*Eretmochelys imbricata*)	Endangered	May affect, not likely to adversely affect
Hawaiian Monk Seal, (*Monachus schauinslandi*)	Endangered	May affect, not likely to adversely affect
Hawaiian Monk Seal, (*Monachus schauinslandi*) Critical Habitat	Critical Habitat	May affect, not likely to adversely affect

Table 4: ESA-listed species and critical habitat under USFWS jurisdiction potentially present in the action area.

Species Under USFWS Jurisdiction	**ESA Listing Designation**	**Effect Determination**
Hawaiian Hoary Bat (*Lasiurus cinereus semotus*),	Endangered	No effect
Newells' Shearwater (*Puffinus auricularis newelli*)	Threatened	May affect, not likely to adversely affect
Hawaiian Petrel (*Pterodroma sandwichensis*)	Endangered	May affect, not likely to adversely affect
Band-rumped storm petrel, Hawaii DPS (*Oceanodroma castro*)	Endangered	May affect, not likely to adversely affect
Green Sea Turtle (*Chelonia mydas*)	Threatened	May affect, not likely to adversely affect
Hawksbill Turtle (*Eretmochelys imbricata*)	Endangered	May affect, not likely to adversely affect

Pursuant to Section 7 ESA, any required consultation with the Service(s) will be conducted in accordance with 50 CFR part 402.

This notice serves as request to the U.S. Fish and Wildlife Service and National Marine Fisheries Service for any additional information on whether any listed or proposed to be listed endangered or threatened species or critical habitat may be present in the area which would be affected by the proposed activity.

ESSENTIAL FISH HABITAT: Pursuant to the Magnuson-Stevens Fishery Conservation and Management Act 1996, the Corps reviewed the project area, examined information provided by the applicant, and consulted available species information.

The Corps intends to initiate Essential Fish Habitat (EFH) consultation separately from this public notice. A separate EFH consultation package will be sent to the National Marine Fisheries Service (NMFS). The Corps will not make a permit decision until the consultation process is complete.

Our final determination relative to project impacts and the need for mitigation measures is subject to review by and coordination with the National Marine Fisheries Service.

NAVIGATION: Based on the Hawaii State Plane coordinates provided by the applicant, the waterward edge of the proposed structure is 130 feet away from the near bottom edge of the Kikiaola Light Draft harbor federal channel.

SECTION 408: The applicant will require permission under Section 14 of the Rivers and Harbors Act (33 USC 408) because the activity, in whole or in part, would alter, occupy, or use a Corps Civil Works project.

WATER QUALITY CERTIFICATION: The proposed action will result in a discharge of dredged or fill material into a water of the U.S. and will require authorization from the Corps in accordance to Section 404 of the Clean Water Act of 1972 (CWA). Under Section 401 of the CWA (Public Law 95-217), the Corps may not issue a permit for the described work until the applicant obtains a certification, or waiver of certification, from the State of Hawaii, Department of Health – Clean Water Branch (DOH-CWB).

NOTE: This public notice is being issued based on information furnished by the applicant. This information has not been verified or evaluated to ensure compliance with laws and regulation governing the regulatory program. The geographic extent of aquatic resources within the proposed project area that either are, or are presumed to be, within the Corps jurisdiction has been verified by Corps personnel.

EVALUATION: The decision whether to issue a permit will be based on an evaluation of the probable impact including cumulative impacts of the proposed activity on the public interest. That decision will reflect the national concern for both protection and utilization of important resources. The benefits, which reasonably may be expected to accrue from the proposal, must be balanced against its reasonably foreseeable

detriments. All factors which may be relevant to the proposal will be considered including cumulative impacts thereof; among these are conservation, economics, esthetics, general environmental concerns, wetlands, historical properties, fish and wildlife values, flood hazards, floodplain values, land use, navigation, shoreline erosion and accretion, recreation, water supply and conservation, water quality, energy needs, safety, food, and fiber production, mineral needs, considerations of property ownership, and in general, the needs and welfare of the people. Evaluation of the impact of the activity on the public interest will also include application of the guidelines promulgated by the Administrator, EPA, under authority of Section 404(b) of the Clean Water Act or the criteria established under authority of Section 102(a) of the Marine Protection Research and Sanctuaries Act of 1972. A permit will be granted unless its issuance is found to be contrary to the public interest.

COMMENTS: The Corps is soliciting comments from the public; Federal, State, and local agencies and officials; Indian Tribes; and other Interested parties in order to consider and evaluate the impacts of this proposed activity. Any comments received will be considered by the Corps to determine whether to issue, modify, condition, or deny a permit for this proposal. To make this determination, comments are used to assess impacts to endangered species, historic properties, water quality, general environmental effects, and the other public interest factors listed above. Comments are used in the preparation of an Environmental Assessment (EA) and/or an Environmental Impact Statement pursuant to the National Environmental Policy Act (NEPA). Comments are also used to determine the need for a public hearing and to determine the overall public interest of the proposed activity.

The Honolulu District will receive written comments on the proposed work, as outlined above, until August 1, 2025. Comments should be submitted electronically via the Regulatory Request System (RRS) at https://rrs.usace.army.mil/rrs or to Joshua Moffi at Joshua.H.Moffi@usace.army.mil. Alternatively, you may submit comments in writing to the Commander, U.S. Army Corps of Engineers, Honolulu District, Attention: Joshua Moffi, 230 Otake Street, CEPOH-RO, Fort Shafter, Hawaii 96858-5440. Please refer to the permit application number in your comments.

Any person may request, in writing, within the comment period specified in this notice, that a public hearing be held to consider the application. Requests for public hearings shall state, with particularity, the reasons for holding a public hearing. Requests for a public hearing will be granted, unless the District Engineer determines that the issues raised are insubstantial or there is otherwise no valid interest to be served by a hearing.

Attachments: 36 drawings

STATE OF HAWAII

DEPARTMENT OF LAND AND NATURAL RESOURCES

DIVISION OF BOATING AND OCEAN RECREATION

JOB NO. B95CK72A

KIKIAOLA SMALL BOAT HARBOR NEW BOAT RAMP

KEKAHA, KAUAI, HAWAII

TMK: (4) 1-2-006:017

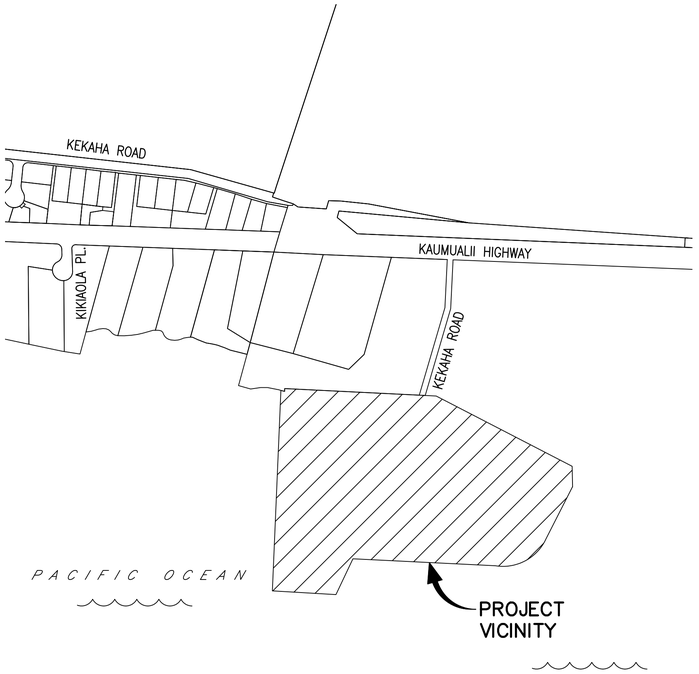

VICINITY MAP

SCALE: 1" = 300'

PLAN NORTH

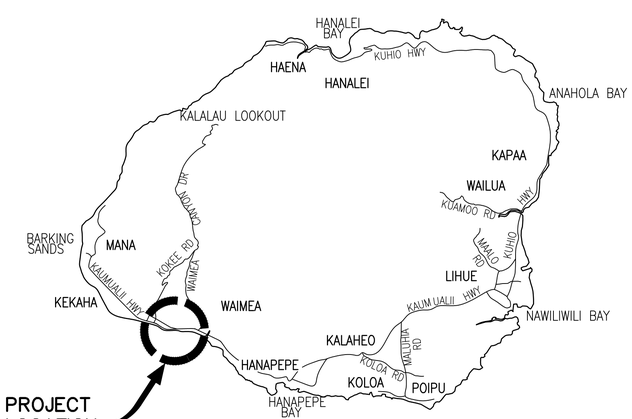

ISLAND OF KAUAI

SCALE: NOT TO SCALE

PLAN NORTH

DRAWING INDEX		
SHEET NUMBER	DRAWING NUMBER	DRAWING TITLE
GENERAL		
01	T-001	TITLE SHEET
02	G-001	LEGEND, ABBREVIATIONS, AND SYMBOLS
CIVIL		
03	C-001	GENERAL NOTES - 1
04	C-002	GENERAL NOTES - 2
05	C-101	BMP DETAILS
06	C-201	EXISTING SITE, BMP, AND DEMOLITION PLAN
07	C-202	SITE PLAN
08	C-203	GRADING PLAN
09	C-204	JOINTING PLAN
10	C-205	PROFILE - BOAT RAMP
11	C-301	SITE SECTIONS
12	C-401	CIVIL DETAILS - 1
13	C-402	CIVIL DETAILS - 2
14	C-403	CIVIL DETAILS - 3
15	C-404	FLOATING DOCK DETAILS
STRUCTURAL		
16	S-001	STRUCTURAL GENERAL NOTES
17	S-002	STRUCTURAL GENERAL NOTES
19	S-003	SYMBOLS AND ABBREVIATIONS
18	S-101	BOAT RAMP PLAN
20	S-102	BOAT RAMP PROFILE
21	S-103	BOAT RAMP SECTION
22	S-104	LEVELING FRAME PLAN
23	S-105	SHEET PILE ELEVATION
24	S-106	SHEET PILE ELEVATION
25	S-201	CAST-IN-PLACE DETAIL
26	S-202	LEVELING FRAME SHEET PILE & CONC. DETAILS
27	S-203	ABUTMENT SECTION
28	S-204	PIPE PILE AT LOADING DOCK DETAILS
29	S-205	PIPE PILE AT ABUTMENT DETAILS
30	S-301	CONCRETE DEMO DETAILS
31	S-302	CONCRETE REPAIR DETAILS
32	S-303	CONCRETE REPAIR SECTION
33	S-401	SOLAR LIGHT POST DETAILS
GEOTECHNICAL		
34	B-101	BORING NOTES
35	B-102	BORING LOGS

APPROVED:

EDWARD R. UNDERWOOD
ADMINISTRATOR
DIVISION OF BOATING AND OCEAN RECREATION
DEPARTMENT OF LAND AND NATURAL RESOURCES

DATE

POH-2024-00105, Waimea Bay
Hawaii Department of Land and Natural Resources
- New Boat Ramp at Kikiaola Small Boat Harbor
Drawings dated May 06, 2025
Sheet 1 of 36

DATE: 09/14/2023
SCALE: AS SHOWN
FILE: B95CK72A-00T-001.dwg
PM: KO
OPER: CTANGONAN
REVISED: 05/03/2024

MAY 3, 2024

BID SET

KIKIAOLA SMALL BOAT HARBOR NEW BOAT RAMP

DRAWING NO.
T-001

SYMBOLS

EXISTING

	CONTROL POINT
	CONCRETE CONCRETE/SLAB
	CRM PAVEMENT/WALL
EDGE PAVEMENT	EDGE OF PAVEMENT
W 6	WATER LINE AND SIZE
WV	WATER VALVE
WV	WATER VALVE
H.B.	HOSE BIBB
E	ELECTRICAL LINE
SL	STREET LIGHT
10	CONTOUR LINE
12.13	SPOT ELEVATION
SIGN	SIGN
	POST
COLUMN	COLUMN
CLEAT	CLEAT
TREE D= H= 40.06	TREE WITH "D" TRUNK DIAMETER AND "H" HEIGHT

NEW

	PCC PAVEMENT
	AC PAVEMENT
	ALUMINUM FRAMED FLOATING DOCK
	STREET LIGHT
	BOLLARD
	PIPE PILE

LIST OF ABBREVIATIONS

@	AT
ø	DIAMETER
%	PERCENT
AC	ASPHALT CONCRETE
ADA	AMERICANS WITH DISABILITIES ACT
℄	BASELINE
B	BOTTOM
BC	BOTTOM CURB
BMP	BEST MANAGEMENT PRACTICES
BW	BOTTOM WALL
CCJ	CRACK CONTROL JOINT
CD	CONDUIT
CO	CLEAN OUT
CF	CUBIC FEET
CONC.	CONCRETE
CONN.	CONNECTION
CONT.	CONTINUE
CRM	CONCRETE RUBBLE MASONRY (ROCK) WALL
CY	CUBIC YARDS
D	DRAIN, DIAMETER
DIA	DIAMETER
DOT	DEPARTMENT OF TRANSPORTATION
E	EAST
ELEC	ELECTRIC
ELEV	ELEVATION
ETC.	ETCETERA
EXIST	EXISTING
FRP	FIBER REINFORCED POLYMER
FT	FEET
G	GROUND
GW	GUY WIRE
H	HEIGHT
HB	HOSE BIB
INV	INVERT
IV	IRRIGATION VALVE
LP	LAMP POST
LT	LEFT
MAX, MAX.	MAXIMUM
MB	MAILBOX
MIN, MIN.	MINIMUM
MLLW	MEAN LOWER LOW WATER
N	NORTH
O/S	OFFSET
PAV'T	PAVEMENT
PBX	PANEL BOX OR PULL BOX
PCC	PORTLAND CEMENT CONCRETE
PVI	POINT OF VERTICAL INTERSECTION
PSI	POUNDS PER SQUARE INCH
RT	RIGHT
SCH	SCHEDULE
SL	STREET LIGHT
SMH	SEWER MANHOLE
STA	STATION
MAX.	SQUARE
SY	SQUARE YARD
T	TOP
TC	TOP OF CURB
TEL	TELEPHONE
THV	TOP HAND VALVE
TMK	TAX MAP KEY
TP	TOP PIPE
TS	TOP STEM
TW	TOP WALL
TYP, TYP.	TYPICAL
U.O.N	UNLESS OTHERWISE NOTED
UHMW	ULTRA-HIGH-MOLECULAR-WEIGHT POLYETHYLENE
UP	UTILITY POLE
UV	ULTRAVIOLET
W	WATER
WV	WATER VALVE

CROSS REFERENCING SYSTEM

SECTION IDENTIFICATION NUMBER

1
C-101

NUMBER OF SHEET ON WHICH SECTION IS DRAWN

SYMBOL WHERE SECTION IS TAKEN

SECTION 1
SCALE: 1/2" = 1'-0" C-101

NUMBER OF SHEET ON WHICH SECTION IS TAKEN

SUBTITLE FOR SECTION DRAWING

DETAIL IDENTIFICATION NUMBER

4
C-101

NUMBER OF SHEET ON WHICH DETAIL IS SHOWN

SYMBOL FOR CONDITION FOR WHICH THERE IS A DETAIL

DETAIL 4
SCALE: 1/2" = 1'-0" C-101

NUMBER OF SHEET WHERE DETAIL APPLIES

SUBTITLE FOR DETAIL DRAWING

MAY 3, 2024

REVISION NO.	SYM.	DESCRIPTION	SHT./OF	DATE	APPROVED

CHRIS J. NAKAMURA
LICENSED PROFESSIONAL ENGINEER
No. 11666-C
HAWAII, U.S.A.

THIS WORK WAS PREPARED BY ME OR UNDER MY SUPERVISION AND CONSTRUCTION OF THIS PROJECT WILL BE UNDER MY OBSERVATION.

SIGNATURE — EXP. DATE OF THE LICENSE 4/30/2026

STATE OF HAWAII
DEPARTMENT OF LAND AND NATURAL RESOURCES
DIVISION OF BOATING AND OCEAN RECREATION

KIKIALOA SMALL BOAT HARBOR
NEW BOAT RAMP

LEGEND, ABBREVIATIONS, AND SYMBOLS

DESIGNED: CT, DK	SUBMITTED:
DRAWN: CT, DK, EU	DATE: 5/3/2024
CHECKED: CN	SCALE: AS NOTED
APPROVED:	DRAWING NO. G-001
CHIEF ENGINEER — DATE	

KIKIAOLA SMALL BOAT HARBOR NEW BOAT RAMP

DATE: 09/14/2023 PM: KO
SCALE: AS SHOWN OPER: CTANGONAN
FILE: B95CK72A-00G-001.dwg REVISED: 05/03/2024

POH-2024-00105, Waimea Bay
Hawaii Department of Land and Natural Resources
- New Boat Ramp at Kikiaola Small Boat Harbor
Drawings dated May 06, 2025
Sheet 2 of 36

GENERAL CIVIL NOTES:

1. ELEVATIONS SHOWN ARE REFERRED TO MEAN LOWER LOW WATER (MLLW).
2. DIMENSIONS TAKE PRECEDENCE OVER SCALE.
3. THE TOPOGRAPHIC SURVEY WAS PREPARED BY CONTROLPOINT SURVEYING, INC. DATED JAN 12, 2024 WITH SUPPLEMENTARY INFORMATION FROM RECORD DRAWINGS AND FIELD INVESTIGATIONS BY HDR.
4. BENCHMARK REFERENCED TO: NGS BENCHMARK, "RMTC", PID–DK4326, DRILL HOLE ELEV = 7.47 FT, MLLW.
5. AZIMUTHS AND COORDINATES REFER TO HAWAII STATE PLANE NAD 83, ZONE 3, U.S. FT.
6. AZIMUTHS MEASURED FROM TRUE SOUTH = 0 DEGREES, 00 MINUTES, 00 SECONDS AND INCREASE CLOCKWISE.
7. THE CONTRACTOR SHALL VERIFY AND CHECK DIMENSIONS AND DETAILS SHOWN ON THE DRAWINGS PRIOR TO THE START OF CONSTRUCTION. DISCREPANCIES MUST BE IMMEDIATELY BROUGHT TO THE ATTENTION OF THE ENGINEER FOR CLARIFICATION.
8. THE CONTRACTOR SHALL AT ALL TIMES DURING PERFORMANCE OF THIS CONTRACT, ASSUME SOLE AND COMPLETE RESPONSIBILITY FOR THE SITE SAFETY CONDITIONS FOR ALL PERSONS AND PROPERTY.
9. THE CONTRACTOR SHALL CONFINE ACTIVITIES WITHIN THE LIMITS OF CONSTRUCTION SHOWN IN THESE PLANS.
10. DUE TO LIMITED SPACE AT THE JOB SITE, THE STATE RECOGNIZES THE NEED FOR A CONSTRUCTION STAGING AREA FOR TEMPORARY STORAGE OF CONSTRUCTION EQUIPMENT AND MATERIAL. CONTRACTOR SHALL COORDINATE TEMPORARY LAYDOWN AREA WITH DLNR DOBOR DISTRICT MANAGEMENT. COORDINATE WITH THE HARBOR MASTER FOR USE OF THE STAGING AREAS(S) AT LEAST 30 DAYS PRIOR TO ANTICIPATED OCCUPANCY. THE STATE IS NOT OBLIGATED TO PROVIDE A STAGING AREAS AS SPACE AVAILABILITY AT THE HARBOR WILL CHANGE FROM TIME TO TIME. SUBMIT A STAGING AREA(S) USE REQUEST AS SOON AS POSSIBLE. THE HARBOR MASTER DETERMINES THE STAGING AREA'S CONDITIONS OF USE.
11. WORK PERFORMED MUST COMPLY WITH APPLICABLE FEDERAL, STATE AND LOCAL LAWS REQUIRED FOR THE PROTECTION OF PUBLIC HEALTH, SAFETY AND ENVIRONMENTAL QUALITY. WHERE REQUIREMENTS VARY, THE MOST STRINGENT REQUIREMENTS APPLY.
12. THE KIKIAOLA SMALL BOAT HARBOR SHALL REMAIN OPEN DURING THE CONSTRUCTION PERIOD. PROVIDE TEMPORARY BARRICADES AND WARNING SIGNS TO SAFETY AND PROTECT THE PUBLIC DURING THE CONSTRUCTION PERIOD. PROVIDE AND MAINTAIN FOR SAFE PEDESTRIAN ACCESS AND VEHICLE ACCESS TO AND FROM THE FACILITY THROUGHOUT THE CONSTRUCTION PERIOD, AS REQUIRED.
13. EXISTING PEDESTRIAN WALKWAYS SHALL BE MAINTAINED IN A PASSABLE CONDITION OR PROVIDE FOR ALTERNATE/TEMPORARY ACCESSIBLE PEDESTRIAN ACCESS ROUTES AND FACILITIES PER THE 2010 ADA STANDARDS FOR ACCESSIBLE DESIGN CHAPTER 2 AND ADAAG 201.3 AND ADAAG 206.1.
14. THE EXISTENCE AND LOCATION OF UNDERGROUND UTILITIES, MANHOLES, MONUMENTS, BURIED RAILROAD TRACKS AND CONCRETE PAVEMENTS, AND OTHER STRUCTURES AS SHOWN ON THE PLANS ARE FROM THE LATEST AVAILABLE DATA BUT THE ACCURACY IS NOT GUARANTEED. THE ENCOUNTERING OF OTHER OBSTACLES DURING THE COURSE OF WORK IS POSSIBLE. THE CONTRACTOR SHALL MAKE AN INDEPENDENT CHECK ON THE GROUND BY PROBING AND/OR WITH THE VARIOUS UTILITY COMPANIES AND GOVERNMENTAL AGENCIES TO VERIFY THE EXACT LOCATIONS AND DEPTHS OF THE EXISTING UTILITIES AND OBSTRUCTIONS. THE CONTRACTOR SHALL EXERCISE PROPER CARE IN EXCAVATING AND COLD PLANING IN THE AREA. WHENEVER CONNECTIONS OF NEW UTILITIES TO EXISTING UTILITIES ARE SHOWN ON THE PLANS, THE CONTRACTOR SHALL EXPOSE THE EXISTING LINES AT THE PROPOSED CONNECTIONS TO VERIFY THEIR LOCATIONS AND DEPTHS PRIOR TO EXCAVATING FOR THE NEW LINES. THE CONTRACTOR SHALL BE HELD LIABLE FOR ANY DAMAGES INCURRED TO THE EXISTING FACILITIES AND/OR IMPROVEMENTS AS A RESULT OF THEIR OPERATIONS.
15. THE CONTRACTOR SHALL NOTIFY AND COORDINATE ALL SITE WORK WITH "THE ONE CALL CENTER" AT (866) 423–7287 AT LEAST 5 WORKING DAYS PRIOR TO THE START OF EXCAVATION OR TRENCHING.
16. THE CONTRACTOR SHALL OBTAIN AND PAY FOR ALL REQUIRED PERMITS FROM THE APPROPRIATE GOVERNMENT AGENCIES.
17. ALL ACTIVE UTILITIES MUST REMAIN–IN–SERVICE AND IN PLACE, WHETHER OR NOT SHOWN ON THE PLANS, AND MUST BE PROTECTED AT ALL TIMES DURING CONSTRUCTION, UNLESS NOTED OTHERWISE.
18. THE CONTRACTOR SHALL REPAIR DAMAGE TO EXISTING UTILITIES AND STRUCTURES CAUSED BY THE CONTRACTOR AT NO ADDITIONAL COST TO THE STATE. REPORT ANY DAMAGE IMMEDIATELY TO THE CONTRACTING OFFICER OR APPROPRIATE GOVERNMENT REPRESENTATIVE. PERSONAL INJURY RESULTING FROM CONTACT WITH THE EXISTING UTILITIES IS THE CONTRACTOR'S RESPONSIBILITY.
19. IF CAVITIES OR VOIDS ARE ENCOUNTERED DURING EXCAVATION WORK, THE CONTRACTOR SHALL STOP WORK IMMEDIATELY AND NOTIFY THE STATE.

GENERAL CIVIL NOTES (CONT):

20. WHEREVER CROSSINGS OF NEW UTILITIES AND EXISTING UTILITIES AND CONNECTIONS OF NEW UTILITIES TO EXISTING UTILITIES ARE SHOWN, EXPOSE THE EXISTING LINES AT THE PROPOSED CROSSINGS AND CONNECTIONS TO VERIFY THEIR LOCATIONS AND DEPTHS PRIOR TO EXCAVATION FOR THE NEW LINES. IF UTILITIES NOT SHOWN ARE ENCOUNTERED, OR IF POTENTIAL UTILITY CONFLICTS ARISE WHICH MAY PREVENT THE INSTALLATION OF THE NEW UTILITIES IN ACCORDANCE WITH THE GRADES AND CLEARANCES SHOWN ON THE PLANS, NOTIFY THE STATE IMMEDIATELY. PROVIDE STRUCTURAL SUPPORT FOR EXISTING UTILITY LINES UNCOVERED IN THE TRENCHES.
21. HARD BOULDERS AND MEDIUM HARD TO HARD BASALT ROCK MAY BE ENCOUNTERED NEAR OR AT THE SITE. APPROPRIATE EQUIPMENT FOR EXCAVATING THE MEDIUM HARD TO HARD BASALT ROCK SHALL BE REQUIRED.
22. NO BLASTING SHALL BE ALLOWED.
23. THE CONTRACTOR SHALL PLAN OPERATIONS TO MINIMIZE THE AMOUNT OF EXCAVATED TRENCHES LEFT OPEN AT THE END OF EACH WORK DAY. SEE SPECIFICATION FOR THE MAXIMUM ALLOWABLE TOTAL LENGTH OF OPEN TRENCHES. OPEN TRENCHES MUST BE COVERED BY NON–SKID STEEL PLATES CAPABLE OF CARRYING H–20 VEHICLES IN TRAFFIC AREAS AND 100 PSF IN NON–TRAFFIC AREAS. PROVIDE ANCHORING OF THE PLATES. PROVIDE FLASHING BARRICADES TO DELINEATE COVERED TRENCHES IN NON–TRAFFIC AREAS AND STOCK/SPOIL PILES.
24. THE CONTRACTOR SHALL CONFORM WITH THE APPLICABLE PROVISIONS OF CHAPTER 54, WATER QUALITY STANDARDS, AND CHAPTER 55, WATER POLLUTION CONTROL, OF TITLE 11, HAWAII ADMINISTRATIVE RULES OF THE STATE DEPARTMENT OF HEALTH.
25. THE CONTRACTOR SHALL PLAN, CONSTRUCT AND UTILIZE ALL BEST MANAGEMENT PRACTICES (BMP) AS REQUIRED TO COMPLY WITH THE LAWS, STANDARDS, RULES, AND/OR POLICIES OF THE COUNTY, STATE, OR FEDERAL REGULATORY AGENCIES.
26. THE CONTRACTOR SHALL PREVENT POLLUTANTS (E.G., SEDIMENT, CONSTRUCTION DEBRIS, CONSTRUCTION MATERIALS, FUELS, CHEMICALS, ETC.) FROM ENTERING THE STORM DRAINAGE SYSTEM AND FROM RUNNING OFF THE PROJECT SITE. REMOVE ALL SILT AND DEBRIS RESULTING FROM CONSTRUCTION WORK DEPOSITED IN DRAINAGE FACILITIES, ROADWAYS, AND OTHER AREAS. THE COSTS INCURRED FOR ANY NECESSARY REMEDIAL ACTION BY THE STATE IS PAYABLE BY THE CONTRACTOR.
27. THE JOB SITE SHALL BE LEFT IN A SAFE AND SECURE CONDITION AT THE END OF EACH CONSTRUCTION WORKDAY. CLEAN UP AND REMOVE ALL RUBBISH. MAINTAIN THE WORK AREA AND PREMISES IN A CLEAN ORDERLY CONDITION AT ALL TIMES.
28. RESTORE TO THEIR ORIGINAL CONDITION ALL IMPROVEMENTS DAMAGED AS A RESULT OF THE CONSTRUCTION, INCLUDING PAVEMENTS, EMBANKMENTS, CURBS, SIGNS, PAVEMENT STRIPING, LANDSCAPING, STRUCTURES, UTILITIES, WALLS, FENCES, ETC. AT NO ADDITIONAL COST TO THE GOVERNMENT.
29. UPON COMPLETION OF CONSTRUCTION, THE ENTIRE JOB SITE SHALL BE CLEANED OF ALL RUBBISH AND DEBRIS.
30. ALL VARIANCES FROM DESIGN MUST BE APPROVED IN ADVANCE BY THE OWNER AND MUST BE INDICATED ON RECORD DRAWINGS.

GRADING NOTES:

1. NO GRADING BETWEEN 7 P.M. TO 7 A.M. ON ANY GIVEN DAY OR ON SATURDAYS, SUNDAYS, AND HOLIDAYS WITHOUT WRITTEN PERMISSION FROM THE COUNTY ENGINEER AND THE STATE DEPARTMENT OF HEALTH.
2. ALL GRADING, GRUBBING, AND STOCKPILING WORK SHALL BE PERFORMED IN ACCORDANCE WITH THE COUNTY OF KAUAI ORDINANCE NO. 808 AND SOIL REPORT BY GEOLABS INC. ENTITLED "KIKIAOLA SMALL BOAT HARBOR – BOAT RAMP REPLACEMENT, PRELIMINARY GEOTECHNICAL RECOMMENDATIONS", DATED "MAY 3, 2024". THE PROJECT IS EXEMPT FROM OBTAINING A GRADING PERMIT FROM THE COUNTY OF KAUAI.
3. FOR BENCHMARK, SEE SHEET C–201.
4. THE GRADED OR PROJECT SITE THAT IS CLEARED OF VEGETATION SHALL BE KEPT DAMP WITH WATER CONTINUOUSLY FOR SEVEN (7) DAYS A WEEK. AT THE END OF EACH DAY, THE SITE SHALL BE SUFFICIENTLY DAMPENED WITH WATER ON A CONTINUAL BASIS SO THAT THE SITE WILL REMAIN MOISTENED DURING THE NIGHT.
5. THE CONTRACTOR SHALL CONDUCT HIS OPERATIONS SO THAT EXCAVATION, EMBANKMENT AND IMPORTED MATERIAL SHALL BE DAMPENED WITH WATER ON A CONTINUAL BASIS TO PREVENT DUST PROBLEMS.
6. TEMPORARY VEGETATIVE COVER SHALL BE PLANTED WITHIN A PERIOD OF 30 CALENDAR DAYS AFTER THE SITE HAS BEEN GRADED OR BARED OF VEGETATION OR IF THE SITE WILL BE SUSPENDED FOR MORE THAN 30 CALENDAR DAYS.
7. TEMPORARY VEGETATIVE COVER SHALL CONSIST OF 40 LBS. COMMON RYE GRASS SEED PER ACRE, 400 LBS. PER ACRE 10–10–10 OR EQUIVALENT FERTILIZER WORKED INTO THE SEED BED BEFORE PLANTING. TEMPORARY SPRINKLER SYSTEMS IS TO BE INSTALLED CONCURRENTLY WITH ALL PLANTINGS. PLANTING AND MAINTENANCE OF GRASS SHALL CONFORM TO THE "HAWAII STANDARD SPECIFICATIONS FOR ROAD AND BRIDGE CONSTRUCTION, 2005" AND ITS AMENDMENTS.
8. THE CONTRACTOR SHALL GRASS THE ENTIRE PROJECT SITE, EXCEPT PAVED AREAS WITH BERMUDA GRASS SPRIGS. THE GRASS SHALL BE PLANTED, FERTILIZED, AND MAINTAINED IN ACCORDANCE WITH THE "HAWAII STANDARD SPECIFICATIONS FOR ROAD AND BRIDGE CONSTRUCTION, 2005" AND ITS AMENDMENTS.

GRADING NOTES (CONT):

9. THE CONTRACTOR SHALL GRASS ALL EXPOSED AREAS THAT HAVE BEEN CONSTRUCTED TO FINAL GRADES WITHIN A PERIOD OF 30 CALENDAR DAYS.
10. IN LIEU OF GRASS SPRIGS (NOTE 1), THE CONTRACTOR MAY USE HYDROMULCH SEEDING AND IRRIGATION SPRINKLER SYSTEM.

WATER POLLUTION AND EROSION CONTROL NOTES:

1. GENERAL:
   - A. THE CONTRACTOR IS REMINDED OF THE REQUIREMENTS OF SECTION 209 – WATER POLLUTION AND EROSION CONTROL AND SECTION 620 –DUST CONTROL IN THE "HAWAII STANDARD SPECIFICATIONS FOR ROAD AND BRIDGE CONSTRUCTION 2005", AND ITS AMENDMENTS. SECTION 209 DESCRIBES BUT IS NOT LIMITED TO SUBMITTAL REQUIREMENTS; SCHEDULING OF A WATER POLLUTION AND EROSION CONTROL CONFERENCE WITH THE COUNTY; CONSTRUCTION REQUIREMENTS; METHOD OF MEASUREMENT; AND BASIS OF PAYMENT. NO WORK SHALL COMMENCE WITHOUT A BMP PLAN APPROVED BY THE DEPARTMENT OF HEALTH.
   - B. THE CONTRACTOR SHALL FOLLOW THE GUIDELINES IN THE "INTERIM BEST MANAGEMENT PRACTICES MANUAL FOR CONSTRUCTION SITES FOR THE COUNTY OF KAUAI, APRIL 2004" IN DEVELOPING, INSTALLING AND MAINTAINING THE BEST MANAGEMENT PRACTICES (BMP'S) FOR THE PROJECT. THE CONTRACTOR MAY SUBMIT ALTERNATE METHODS TO THE COUNTY FOR ACCEPTANCE.
   - C. THE CONTRACTOR SHALL KEEP A COPY OF THE APPROVED BMP PLAN, NOI, ETC. ON THE PROJECT SITE. THE BMP PLAN SHALL BE UPDATED TO REFLECT ANY CHANGES MADE DURING THE COURSE OF CONSTRUCTION FOR THE DURATION OF THE PROJECT.
   - D. THE ENGINEER MAY ASSESS LIQUIDATED DAMAGES OF UP TO $27,500 FOR NON–COMPLIANCE OF EACH BMP REQUIREMENT AND EACH REQUIREMENT STATED IN SECTION 209, FOR EVERY DAY ON NON–COMPLIANCE. THERE IS NO MAXIMUM LIMIT ON THE AMOUNT ASSESSED PER DAY.
   - E. THE ENGINEER WILL DEDUCT THE COST FROM THE PROGRESS PAYMENT FOR ALL CITATIONS RECEIVED BY THE DEPARTMENT FOR NON–COMPLIANCE, OR THE CONTRACTOR/OWNER SHALL REIMBURSE THE STATE FOR THE FULL AMOUNT OF THE OUTSTANDING COST INCURRED BY THE STATE.
2. WASTE DISPOSAL:
   - A. WASTE MATERIALS: ALL WASTE MATERIALS SHALL BE COLLECTED AND STORED IN A SECURELY LIDDED METAL DUMPSTER THAT DOES NOT LEAK. THE DUMPSTER SHALL MEET ALL LOCAL AND STATE SOLID WASTE MANAGEMENT REGULATIONS. ALL TRASH AND CONSTRUCTION DEBRIS FROM THE SITE SHALL BE DEPOSITED IN THE DUMPSTER. THE DUMPSTER SHALL BE EMPTIED AT A MINIMUM OF TWICE PER WEEK OR AS OFTEN AS IS DEEMED NECESSARY. NO CONSTRUCTION WASTE MATERIAL SHALL BE BURIED ONSITE. THE CONTRACTOR'S SUPERVISORY PERSONNEL SHALL BE INSTRUCTED REGARDING THE CORRECT PROCEDURE FOR WASTE DISPOSAL. NOTICES STATING THESE PRACTICES SHALL BE POSTED IN THE OFFICE TRAILER AND THE CONTRACTOR SHALL BE RESPONSIBLE FOR SEEING THAT THESE PROCEDURES ARE FOLLOWED.
   - B. HAZARDOUS WASTE: ALL HAZARDOUS WASTE MATERIALS SHALL BE DISPOSED OF IN THE MANNER SPECIFIED BY LOCAL OR STATE REGULATIONS OR BY THE MANUFACTURER. THE CONTRACTORS SITE PERSONNEL SHALL BE INSTRUCTED IN THESE PRACTICES AND SHALL BE RESPONSIBLE FOR SEEING THAT THESE PRACTICES ARE FOLLOWED.
   - C. SANITARY WASTE: ALL SANITARY WASTE SHALL BE COLLECTED FROM THE PORTABLE UNITS A MINIMUM OF ONCE PER WEEK, OR AS REQUIRED.
3. EROSION AND SEDIMENT CONTROL INSPECTION AND MAINTENANCE PRACTICES:
   - A. ALL CONTROL MEASURES SHALL BE INSPECTED AT LEAST ONCE EACH WEEK AND WITHIN 24 HOURS FOLLOWING ANY RAINFALL EVENT OF 0.5 INCHES OR GREATER.
   - B. ALL MEASURES SHALL BE MAINTAINED IN GOOD WORKING ORDER. IF REPAIR IS NECESSARY, IT SHALL BE INITIATED WITHIN 24 HOURS AFTER THE INSPECTION.
   - C. TEMPORARY AND PERMANENT SEEDING AND PLANTING SHALL BE INSPECTED FOR BARE SPOTS, WASH OUTS AND HEALTHY GROWTH.
   - D. PERSONNEL SELECTED FOR THE INSPECTION AND MAINTENANCE RESPONSIBILITIES SHALL RECEIVE TRAINING FROM THE CONTRACTOR. THEY SHALL BE TRAINED IN ALL THE INSPECTION AND MAINTENANCE PRACTICES NECESSARY FOR KEEPING THE EROSION AND SEDIMENT CONTROLS USED ONSITE IN GOOD WORKING ORDER.
   - E. ALL SLOPES AND EXPOSED AREAS SHALL BE GRASSED AS FINAL GRADES HAVE BEEN ESTABLISHED. GRADING TO FINAL GRADE SHALL BE CONTINUOUS, AND ANY AREA IN WHICH WORK HAS BEEN INTERRUPTED OR DELAYED OR EXPOSED FOR MORE THAN 15 DAYS SHALL BE GRASSED IN ORDER TO PREVENT DUST EMISSION, EROSION AND SILT RUNOFF. AREAS WITH IMPORTED SOILS SHALL BE GRASSED NOT MORE THAN 5 WORKING DAYS AFTER THE FINAL GRADES HAVE BEEN ESTABLISHED.
   - F. TEMPORARY EROSION CONTROL SHALL NOT BE REMOVED BEFORE PERMANENT EROSION CONTROLS ARE IN–PLACE AND ESTABLISHED.

REVISION NO.	SYM.	DESCRIPTION	SHT./OF	DATE	APPROVED

CHRIS J. NAKAMURA
LICENSED PROFESSIONAL ENGINEER
No. 11666-C
HAWAII, U.S.A.

THIS WORK WAS PREPARED BY ME OR UNDER MY SUPERVISION AND CONSTRUCTION OF THIS PROJECT WILL BE UNDER MY OBSERVATION.

SIGNATURE — 4/30/2026 EXP. DATE OF THE LICENSE

STATE OF HAWAII
DEPARTMENT OF LAND AND NATURAL RESOURCES
DIVISION OF BOATING AND OCEAN RECREATION

KIKIALOA SMALL BOAT HARBOR
NEW BOAT RAMP

GENERAL NOTES - 1

DESIGNED: CT, DK | SUBMITTED:
DRAWN: CT, DK, EU | DATE: 5/3/2024
CHECKED: CN | SCALE: AS NOTED
APPROVED: CHIEF ENGINEER — DATE
DRAWING NO. C-001

JOB NO. B95CK72A SHEET NO. 03 OF 35 SHEETS

MAY 3, 2024

KIKIAOLA SMALL BOAT HARBOR NEW BOAT RAMP

DATE: 03/04/2024 PM: KO
SCALE: AS SHOWN OPER: CTANGONAN
FILE: B95CK72A-00C-001.dwg REVISED 05/03/2024

POH-2024-00105, Waimea Bay
Hawaii Department of Land and Natural Resources
- New Boat Ramp at Kikiaola Small Boat Harbor
Drawings dated May 06, 2025
Sheet 3 of 36

WATER POLLUTION AND EROSION CONTROL NOTES (CONT):

4. GOOD HOUSEKEEPING BEST MANAGEMENT PRACTICES:

   A. MATERIALS POLLUTION PREVENTION PLAN:

      a. APPLICABLE MATERIALS OR SUBSTANCES LISTED BELOW ARE EXPECTED TO BE PRESENT ONSITE DURING CONSTRUCTION. OTHER MATERIALS AND SUBSTANCES NOT LISTED BELOW SHALL BE ADDED TO THE INVENTORY OF THE CONSTRUCTION CONTRACTOR'S SITE-SPECIFIC BMP PLAN.

CONCRETE	FERTILIZERS
DETERGENTS	PETROLEUM BASED PRODUCTS
PAINTS (ENAMEL AND LATEX)	CLEANING SOLVENTS
METAL STUDS	WOOD
TAR	MASONRY BLOCK

      b. MATERIAL MANAGEMENT PRACTICES SHALL BE USED TO REDUCE THE RISK OF SPILLS OR OTHER ACCIDENTAL EXPOSURE OF MATERIALS AND SUBSTANCES TO STORM WATER RUNOFF. AN EFFORT SHALL BE MADE TO STORE ONLY ENOUGH PRODUCTS AS IS REQUIRED TO DO THE JOB.

      c. ALL MATERIALS STORED ONSITE SHALL BE STORED IN A NEAT, ORDERLY MANNER IN THEIR APPROPRIATE CONTAINERS AND IF POSSIBLE, UNDER A ROOF OR OTHER ENCLOSURE.

      d. PRODUCTS SHALL BE KEPT IN THEIR ORIGINAL CONTAINERS WITH THE ORIGINAL MANUFACTURES LABEL.

      e. SUBSTANCES SHALL NOT BE MIXED WITH ONE ANOTHER UNLESS RECOMMENDED BY THE MANUFACTURER.

      f. A PRODUCT SHALL BE USED UP COMPLETELY BEFORE DISPOSING OF THE CONTAINER.

      g. MANUFACTURER'S RECOMMENDATIONS FOR PROPER USE AND DISPOSAL SHALL BE FOLLOWED.

      h. THE CONTRACTOR SHALL CONDUCT A DAILY INSPECTION TO ENSURE PROPER USE AND DISPOSAL OF MATERIALS ONSITE.

   B. HAZARDOUS MATERIAL POLLUTION PREVENTION PLAN:

      a. PRODUCTS SHALL BE KEPT IN ORIGINAL CONTAINERS UNLESS THEY ARE NOT RESEALABLE.

      b. ORIGINAL LABELS AND MATERIAL SAFETY DATA SHEETS (MSDS) SHALL BE RETAINED AND MADE AVAILABLE TO THE COUNTY UPON REQUEST.

      c. SURPLUS PRODUCTS SHALL BE DISPOSED OF ACCORDING TO MANUFACTURER'S INSTRUCTIONS OR LOCAL AND STATE RECOMMENDED REGULATIONS.

   C. ONSITE AND OFFSITE PRODUCTS SPECIFIC PLANS:

      THE FOLLOWING PRODUCTS SPECIFIC PRACTICES SHALL BE FOLLOWED ONSITE:

      a. PETROLEUM BASED PRODUCTS: ALL ONSITE VEHICLES SHALL BE MONITORED FOR LEAKS AND RECEIVED REGULAR PREVENTIVE MAINTENANCE TO REDUCE THE CHANCE OF LEAKAGE. PETROLEUM PRODUCTS SHALL BE STORED IN TIGHTLY SEALED CONTAINERS WHICH ARE CLEARLY LABELED. ANY ASPHALT SUBSTANCES USED ONSITE SHALL BE APPLIED ACCORDING TO THE MANUFACTURER'S RECOMMENDATION.

      b. FERTILIZERS: APPLY FERTILIZERS USED ONLY IN THE MINIMUM AMOUNTS RECOMMENDED BY THE MANUFACTURER. ONCE APPLIED, WORK FERTILIZER INTO THE SOIL TO LIMIT EXPOSURE TO STORM WATER. STORAGE SHALL BE KEPT IN A COVERED SHED. TRANSFER THE CONTENTS OF ANY PARTIALLY USED BAGS OF FERTILIZER TO A SEALABLE PLASTIC BIN TO AVOID SPILLS.

      c. PAINTS: SEAL AND STORE ALL CONTAINERS WHEN NOT REQUIRED FOR USE. DO NOT DISCHARGE EXCESS PAINT TO THE ROADWAY DRAINAGE SYSTEM. DISPOSE PROPERLY ACCORDING TO THE MANUFACTURER'S INSTRUCTION OR STATE AND LOCAL REGULATIONS.

      d. CONCRETE TRUCKS: WASH OUT OR DISCHARGE CONCRETE TRUCK DRUM WASH WATER ONLY AT A DESIGNATED SITE. DO NOT DISCHARGE WATER IN THE ROADWAY DRAINAGE SYSTEM OR WATERS OF THE UNITED STATES. CONTACT DRINKING WATER BRANCH, DEPARTMENT OF HEALTH AT (808) 586-4309 TO RECEIVE PERMISSION TO DESIGNATE A DISPOSAL SITE. CLEAN DISPOSAL SITE AS REQUIRED OR AS REPRESENTED BY THE OWNER'S REPRESENTATIVE.

   D. SPILL CONTROL PLAN:

      a. POST A SPILL PREVENTION PLAN TO INCLUDE MEASURES TO PREVENT AND CLEAN UP EACH SPILL.

      b. THE CONTRACTOR SHALL BE THE PREVENTION AND CLEAN-UP COORDINATOR. DESIGNATE AT LEAST THREE SITE PERSONNEL WHO SHALL RECEIVE SPILL PREVENTION AND CLEANUP TRAINING. THESE INDIVIDUALS SHALL EACH BECOME RESPONSIBLE FOR A PARTICULAR PHASE OF PREVENTION AND CLEANUP. POST THE NAMES OF RESPONSIBLE SPILL PERSONNEL IN THE MATERIAL STORAGE AREA AND IN THE OFFICE TRAILER ONSITE.

      c. CLEARLY POST MANUFACTURER'S RECOMMENDED METHODS FOR SPILL CLEANUP. MAKE SITE PERSONNEL AWARE OF THE PROCEDURES AND THE LOCATION OF INFORMATION AND CLEANUP SUPPLIES.

      d. KEEP MATERIAL AND EQUIPMENT NECESSARY FOR SPILL CLEANUP IN THE MATERIAL STORAGE AREA ONSITE.

      e. CLEAN UP ALL SPILLS IMMEDIATELY AFTER DISCOVERY.

      f. KEEP THE SPILL AREA WELL VENTILATED. PERSONNEL SHALL WEAR APPROPRIATE PROTECTIVE CLOTHING TO PREVENT INJURY FROM CONTACT WITH HAZARDOUS SUBSTANCES.

      g. REPORT SPILLS OF TOXIC HAZARDOUS MATERIAL TO THE APPROPRIATE STATE OR LOCAL GOVERNMENT AGENCY, REGARDLESS OF SIZE.

5. NATIONAL POLLUTANT DISCHARGE ELIMINATION SYSTEM (NPDES) REQUIREMENTS:

   A. THE CONTRACTOR SHALL OBTAIN AND COMPLY WITH NATIONAL POLLUTANT DISCHARGE ELIMINATION SYSTEM (NPDES) PERMIT REQUIREMENTS FOR ALL PROJECTS WHICH WILL DISTURB ONE (1) ACRE OR MORE OF LAND. THE CONTRACTOR SHALL NOT START CONSTRUCTION UNTIL NOTICE OF GENERAL PERMIT COVERAGE (NGPC) IS RECEIVED FROM THE DEPARTMENT OF HEALTH, STATE OF HAWAII AND HAS SATISFIED ANY OTHER APPLICABLE REQUIREMENTS OF THE NPDES PERMIT PROGRAM.

ENVIRONMENTAL NOTES:

1. IN ACCORDANCE WITH CHAPTER 11-60.1, AIR POLLUTION CONTROL, TITLE 11, HAWAII ADMINISTRATIVE RULES, THE CONTRACTOR SHALL BE RESPONSIBLE FOR ENSURING THAT EFFECTIVE CONTROL MEASURES ARE PROVIDED TO MINIMIZE OR PREVENT ANY VISIBLE DUST EMISSION CAUSED BY THE CONSTRUCTION WORK FROM IMPACTING THE SURROUNDING AREAS INCLUDING THE OFF-SITE ROADWAYS USED TO ENTER/EXIT THE PROJECT. THESE MEASURES INCLUDE BUT ARE NOT LIMITED TO THE USE OF WATER WAGONS, SPRINKLER SYSTEMS, DUST FENCES, ETC.

2. IN ACCORDANCE WITH CHAPTER 11-55, WATER POLLUTION CONTROL AND CHAPTER 11-54, WATER QUALITY STANDARDS, TITLE 11, HAWAII ADMINISTRATIVE RULES, THE CONTRACTOR SHALL BE RESPONSIBLE FOR ENSURING THAT THE BEST MANAGEMENT PRACTICE (BMP) TO MINIMIZE OR PREVENT THE DISCHARGE OF SEDIMENTS, DEBRIS AND OTHER WATER POLLUTANT INTO STATE WATERS ARE PROVIDED AT ALL TIMES.

3. IN ACCORDANCE WITH CHAPTER 11-58, SOLID WASTE MANAGEMENT CONTROL, TITLE 11, HAWAII ADMINISTRATIVE RULES, THE CONTRACTOR SHALL BE RESPONSIBLE FOR ENSURING THAT GRUB MATERIAL, DEMOLITION WASTE AND CONSTRUCTION WASTE GENERATED BY THE PROJECT ARE DISPOSED OF IN A MANNER OR AT A SITE APPROVED BY THE STATE DEPARTMENT OF HEALTH. DISPOSAL OF ANY OF THESE WASTES BY BURNING IS PROHIBITED.

4. THE CONTRACTOR SHALL BE RESPONSIBLE FOR OBTAINING ANY PAYING FOR ALL APPLICABLE PERMITS FROM THE DEPARTMENT OF HEALTH INCLUDING BUT NOT LIMITED TO NATIONAL POLLUTANT DISCHARGE ELIMINATION SYSTEM (NPDES), NOTICE OF INTENT AND GENERAL PERMIT FOR STORM WATER, HYDROSTATIC TEST AND DEWATERING DISCHARGES PRIOR TO COMMENCING CONSTRUCTION. NPDES PERMIT SHALL BE REQUIRED PRIOR TO GRADING OR GRUBBING WORK OVER AN AREA OF ONE ACRE OR MORE.

5. AFTER EACH RAINFALL EVENT, THE CONTRACTOR SHALL REMOVE ALL SIT AND DEBRIS RESULTING FROM HIS WORK AND DEPOSITED IN DRAINAGE FACILITIES, ROADWAYS AND OTHER AREAS. THE COST INCURRED FOR ANY NECESSARY REMEDIAL ACTION BY THE COUNTY ENGINEER SHALL BE PAYABLE BY THE CONTRACTOR.

6. BEST MANAGEMENT PRACTICES (BMP'S) SHALL BE EMPLOYED AT ALL TIMES TO THE MAXIMUM EXTENT PRACTICABLE TO PREVENT DAMAGE BY SEDIMENTATION, EROSION OR DUST TO STREAMS, WATERCOURSE, NATURAL AREAS AND THE PROPERTY OF OTHERS.

7. THE CONTRACTOR SHALL OBTAIN AND COMPLY WITH NATIONAL POLLUTANT DISCHARGE ELIMINATION SYSTEMS (NPDES) PERMIT REQUIREMENTS FOR ALL PROJECTS WHICH WILL DISTURB ONE (1) ACRE OR MORE OF LAND. THE CONTRACTOR SHALL NOT START CONSTRUCTION UNTIL NOTICE OF GENERAL PERMIT COVERAGE (NGPC) IS RECEIVED FROM THE DEPARTMENT OF HEALTH, STATE OF HAWAII AND HAS SATISFIED ANY OTHER APPLICABLE REQUIREMENTS OF THE NPDES PERMIT PROGRAM.

8. IN ACCORDANCE WITH CHAPTER 11-46, COMMUNITY NOISE, HAWAII ADMINISTRATIVE RULES, THE CONTRACTOR SHALL BE RESPONSIBLE FOR PROVIDING EFFECTIVE CONTROL MEASURES TO MINIMIZE OR PREVENT CONSTRUCTION RELATED NOISE FROM IMPACTING THE RESIDENTS IN THE IMMEDIATE AREA. IF REQUIRED, NOISE REDUCTION MEASURES SHALL BE IMPLEMENTED BY THE CONTRACTOR DURING THE CONSTRUCTION WORK.

HISTORICAL PRESERVATION NOTE:

1. SHOULD HISTORIC REMAINS SUCH AS ARTIFACTS, BURIALS, CONCENTRATIONS OF SHELL OR CHARCOAL BE ENCOUNTERED DURING CONSTRUCTION ACTIVITIES, WORK SHALL CEASE IMMEDIATELY IN THE IMMEDIATE VICINITY OF THE FIND AND THE FIND SHALL BE PROTECTED FROM FURTHER DAMAGE. THE CONTRACTOR SHALL CORDON OFF THE AREA AND IMMEDIATELY NOTIFY THE PLANNING DEPARTMENT AT (808) 241-4050 AND THE STATE HISTORIC PRESERVATION DIVISION AT (808) 692-8015, WHICH WILL ASSESS THE SIGNIFICANCE OF THE FIND AND RECOMMEND THE APPROPRIATE MITIGATION MEASURES, IF NECESSARY. IN ADDITION, IF HUMAN BURIALS ARE FOUND, THE CONTRACTOR SHALL IMMEDIATELY NOTIFY THE COUNTY OF KAUAI POLICE DEPARTMENT.

RAMPS, FLOATS AND PLATFORMS:

1. STRUCTURAL PLANS FOR ALL ITEMS SHALL BE PROVIDED BY THE CONTRACTOR FOR THE ENGINEER'S REVIEW AND APPROVAL PRIOR TO STARTING FABRICATION.

2. ALL DESIGN SHALL CONFORM WITH AWS D1.1 STRUCTURAL WELDING CODE - STEEL, AND AWS D1.2 STRUCTURAL WELDING CODE - ALUMINUM.

3. FOUR SETS OF FINAL DESIGN DRAWINGS AND STRUCTURAL CALCULATIONS SHALL BE FURNISHED AND STAMPED BY A PROFESSIONAL ENGINEER LICENSED IN THE STATE OF HAWAII.

4. DESIGN LIVE LOAD FOR THE WALKING SURFACE SHALL BE 100 PSF.

5. RAMPS, PLATFORMS, AND SUPPORT ARRANGEMENTS SHALL BE AS SHOWN ON DRAWINGS.

6. STRUCTURE MATERIAL SHALL BE ALUMINUM ALLOY 6061-T6, 6063-TH, 3004H26, OR APPROVED EQUAL.

7. ALL MEMBERS OTHER THAN THE WALKING SURFACE SHALL BE SMOOTH AND FREE OF SHARP EDGES. THE CORNERS OF THE TOP CHORDS SHALL HAVE A RADIUS EDGE.

8. ALL BUSHINGS, WEAR STRIPS, AND ANY OTHER NON-METALLIC PARTS USED IN THE MANUFACTURE OF THE STRUCTURE SHALL BE ULTRA-HIGH-MOLECULAR-WEIGHT POLYETHYLENE (UHMW). THE UHMW SHALL BE BLACK AND ULTRAVIOLET STABILIZED. WALKWAY SUPPORT BEARINGS SHALL BE UHMW.

9. CONTRACTOR SHALL PROVIDE ADEQUATE GALVANIC INSULATION MATERIAL AT ALL ALUMINUM-STEEL INTERFACES.

10. ALL BOLTED CONNECTIONS SHALL HAVE SUITABLE GALVANIC INSULATION.

11. PROVIDE WEEP HOLES IN ALL CLOSED STRUCTURAL SECTIONS TO PREVENT WATER ACCUMULATION.

12. CONTRACTOR TO FURNISH PREFABRICATED FLOATS INCLUDED IN FLOATING DOCK SYSTEM DESIGN.

13. THE FLOAT DOCK MUST ACCOMMODATE THE PROPOSED PILE DIAMETERS AND LOCATIONS. FIELD VERIFY PILE SPACING AND DIAMETERS PRIOR TO FABRICATION.

14. WHERE FLOATS ENGAGE WITH PROPOSED ANCHOR PILES, 1" (±1/8") CLEAR SPACE MAXIMUM BETWEEN THE UHMW PAD AND THE PILES MUST BE PROVIDED. ONE POSSIBLE METHOD OF ANCHORING THE CONTRACTOR AND/OR FLOAT MANUFACTURER SHALL SUBMIT DETAIL FOR REVIEW AND APPROVAL PRIOR TO STARTING FABRICATION.

15. FLOAT DOCK SYSTEM MANUFACTURER SHALL DESIGN THE SYSTEM TO ALLOW UNRESTRICTED VERTICAL MOVEMENT OF THE FLOATING DOCK SYSTEM THROUGH THE ENTIRE RANGE OF WATER LEVELS INDICATED ON THE PLANS CONSIDERING THE FOLLOWING PARAMETERS.

    A. UTILITY WEIGHT DETERMINED FROM INFORMATION SHOWN ON THE PLANS

    B. FREEBOARD UNDER DEAD LOAD SHALL BE NO LESS THAN 12 INCHES AND NO MORE THAN 24 INCHES

    C. FREEBOARD UNDER FULL DEAD LOAD PLUS LIVE LOAD SHALL BE NO LESS THAN 6 INCHES

    D. ACCOMMODATE A WAVE HEIGHT OF 2.25 FEET AND WAVE PERIOD UP TO 2 SECONDS

16. IF HOLLOW STEEL OR ALUMINUM FLOATS ARE USED, THEY MUST BE FILLED WITH CLOSED CELL EXPANDED POLYSTYRENE TO PREVENT SINKING IN THE EVENT OF WATER INTRUSION.

17. ALL FLOAT EDGES SHALL BE ROUNDED.

18. DESIGN DEBRIS FENDERS FOR THE FOLLOWING LOADS:

    A. STREAM PRESSURE @ 1FT/SEC (TYPICAL CURRENT): 1 PSF

    B. STREAM PRESSURE @ 5FT/SEC (STORM CONDITION): 25 PSF

    C. DEBRIS POINT LOADING OF 4000LB APPLIED IN ANY DIRECTION FLOWING WITH CURRENT

REVISION NO.	SYM.	DESCRIPTION	SHT./OF	DATE	APPROVED

CHRIS J. NAKAMURA
LICENSED PROFESSIONAL ENGINEER
No. 11666-C
HAWAII, U.S.A.

THIS WORK WAS PREPARED BY ME OR UNDER MY SUPERVISION AND CONSTRUCTION OF THIS PROJECT WILL BE UNDER MY OBSERVATION.

SIGNATURE — EXP. DATE OF THE LICENSE 4/30/2026

STATE OF HAWAII
DEPARTMENT OF LAND AND NATURAL RESOURCES
DIVISION OF BOATING AND OCEAN RECREATION

KIKIALOA SMALL BOAT HARBOR
NEW BOAT RAMP

GENERAL NOTES - 2

DESIGNED: CT, DK	SUBMITTED:
DRAWN: CT, DK, EU	DATE: 5/3/2024
CHECKED: CN	SCALE: AS NOTED
APPROVED:	DRAWING NO. C-002

CHIEF ENGINEER — DATE

MAY 3, 2024

KIKIAOLA SMALL BOAT HARBOR NEW BOAT RAMP

DATE: 03/04/2024 PM: KO
SCALE: AS SHOWN OPER: CTANGONAN
FILE: B95CK72A-00C-001.dwg REVISED:05/03/2024

POH-2024-00105, Waimea Bay
Hawaii Department of Land and Natural Resources
- New Boat Ramp at Kikiaola Small Boat Harbor
Drawings dated May 06, 2025, Sheet 4 of 36

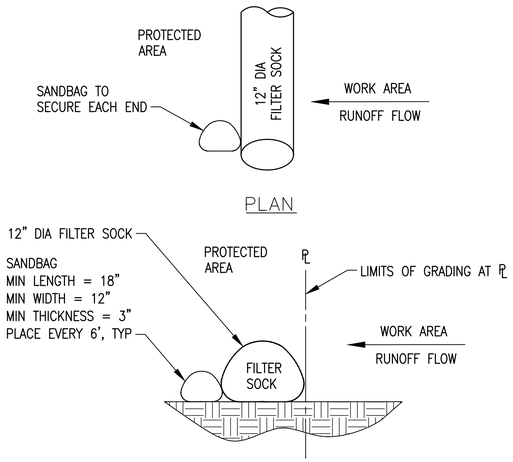

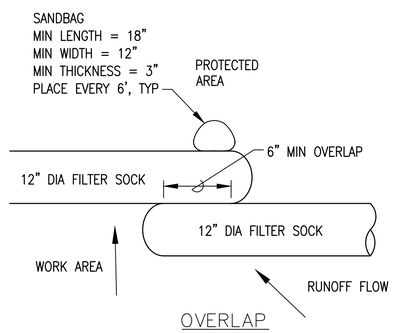

NOTES:

1. INSTALLATION, INSPECTION, MAINTENANCE AND REMOVAL OF COMPOST FILTER SOCKS SHALL BE DONE IN ACCORDANCE WITH MANUFACTURER'S RECOMMENDATIONS.
2. PROVIDE NECESSARY TRAINING FOR PERSONNEL WHO WILL BE RESPONSIBLE FOR IMPLEMENTATION OF BMPS.
3. FILTER SOCK OUTER/ENCASEMENT MATERIAL SHALL BE UV-RESISTANT, DROUGHT-TOLERANT, MARINE-TOLERANT, BRIGHT YELLOW OR ORANGE, AND MULTI-FILAMENT POLYPROPYLENE OR MONOFILAMENT WOMEN HDPE FABRIC WITH FLOW RANGE OF 185 GPM/SF TO 240 GPM/SF.

FILTER SOCK (1)

SCALE: NOT TO SCALE C-201

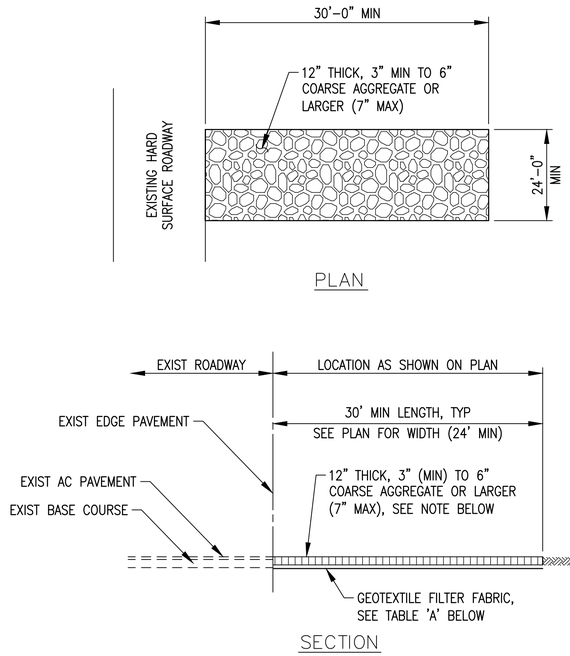

NOTE:

COARSE AGGREGATE LAYER SHALL BE REMOVED IMMEDIATELY PRIOR TO INSTALLATION OF ROADWAY BASE COURSE.

TABLE A – GEOTEXTILE REQUIREMENTS	
PHYSICAL PROPERTY	REQUIREMENTS
GRAB TENSILE STRENGTH	220 LB (ASTM D1682)
ELONGATION FAILURE	60% (ASTM D1682)
MULLEN BURST STRENGTH	430 LB (ASTM D3768)
PUNCTURE STRENGTH	125 LB (ASTM D751, MODIFIED)
EQUIVALENT OPENING	SIZE 40-80 (U.S. STD SIEVE, CW-02215)

STABILIZED CONSTRUCTION EXIT/ENTRANCE (2)

SCALE: NOT TO SCALE C-201

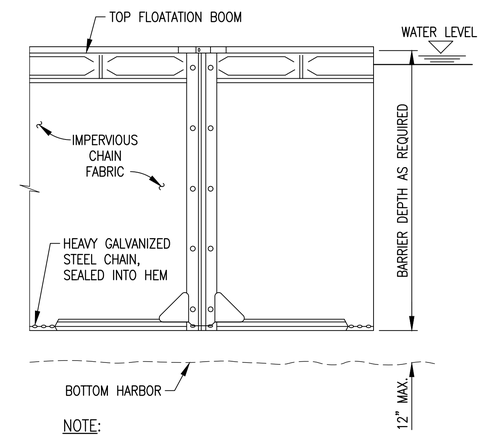

NOTE:

CONTRACTOR SHALL PROVIDE BOOM ANCHORS AS RECOMMENDED BY THE MANUFACTURER.

TYPE 2 DOT TURBIDITY CURTAIN (3)

SCALE: NOT TO SCALE C-201

REVISION NO.	SYM.	DESCRIPTION	SHT./OF	DATE	APPROVED

CHRIS J. NAKAMURA LICENSED PROFESSIONAL ENGINEER No. 11666-C HAWAII, U.S.A.

THIS WORK WAS PREPARED BY ME OR UNDER MY SUPERVISION AND CONSTRUCTION OF THIS PROJECT WILL BE UNDER MY OBSERVATION.

SIGNATURE — EXP. DATE OF THE LICENSE 4/30/2026

STATE OF HAWAII
DEPARTMENT OF LAND AND NATURAL RESOURCES
DIVISION OF BOATING AND OCEAN RECREATION

KIKIALOA SMALL BOAT HARBOR
NEW BOAT RAMP

BMP DETAILS

DESIGNED: CT, DK — SUBMITTED:
DRAWN: CT, DK, EU — DATE: 5/3/2024
CHECKED: CN — SCALE: AS NOTED
APPROVED: — DRAWING NO. C-101
CHIEF ENGINEER — DATE

POH-2024-00105, Waimea Bay
Hawaii Department of Land and Natural Resources
- New Boat Ramp at Kikiaola Small Boat Harbor
Drawings dated May 06, 2025
Sheet 5 of 36

DATE: 03/11/2024 PM: KO
SCALE: AS SHOWN OPER: CTANGONAN
FILE: B95CK72A-00C-103.dwg REVISED: 05/03/2024

MAY 3, 2024

KIKIAOLA SMALL BOAT HARBOR NEW BOAT RAMP

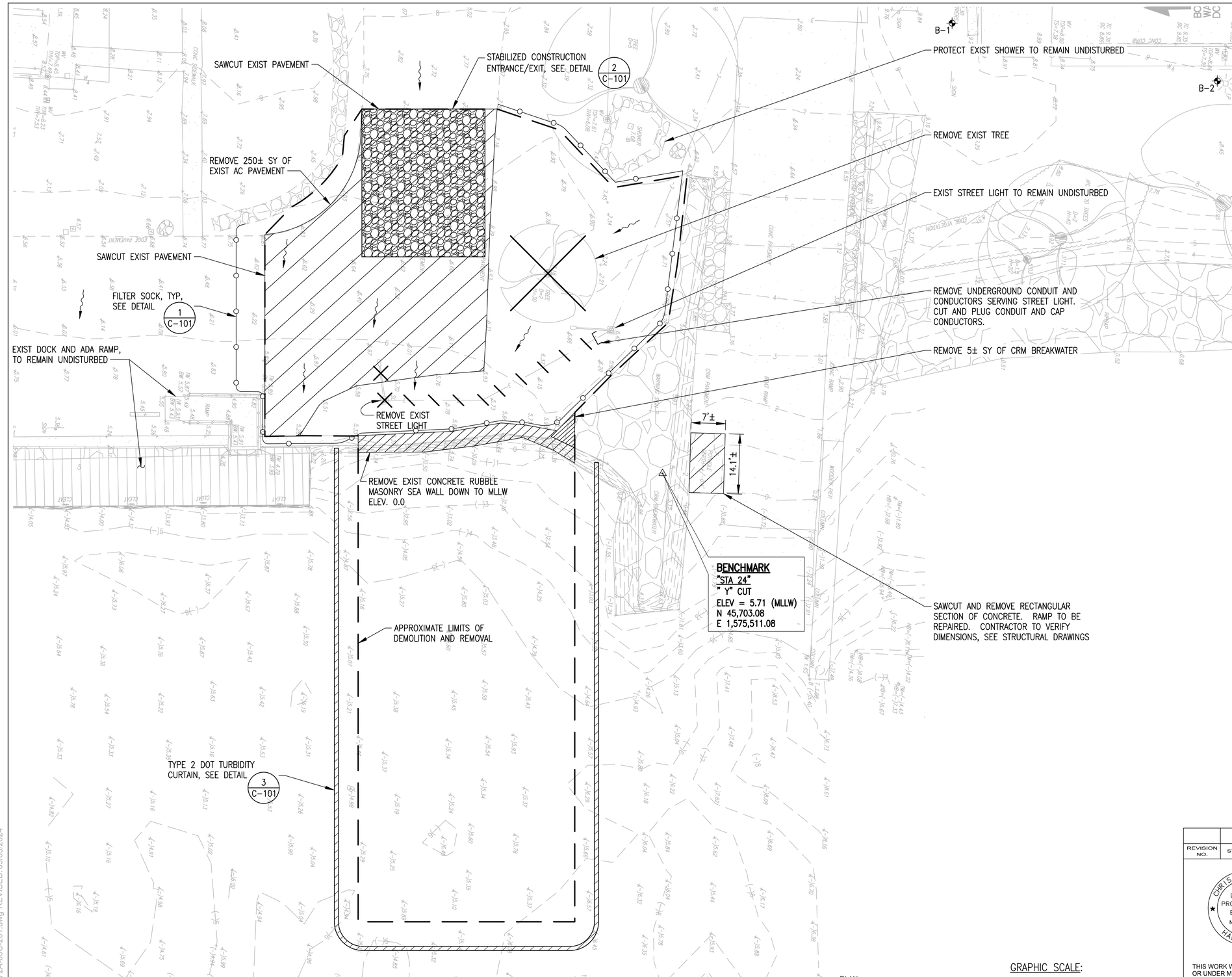

EXISTING SITE, BMP, AND DEMOLITION PLAN

SCALE: 1" = 10'

GRAPHIC SCALE:

10' 5' 0' 10' 20'

SCALE: 1" = 10'

NOTES:

1. THE CONTRACTOR SHALL REMOVE ALL PAVEMENTS, STRUCTURES, VEGETATION, SIGNS AND POSTS, RUBBISH AND OTHER OBSTRUCTIONS WITHIN THE LIMIT OF DEMOLITION AND REMOVAL, UNLESS CALLED OUT TO REMAIN UNDISTURBED ON THIS PLAN.
2. FOR DEMOLITION OF STREET LIGHT AND ELECTRICAL CONDUITS, THE CONTRACTOR SHALL COORDINATE WORK WITH RESPECTIVE UTILITY COMPANY.
3. CONTRACTOR SHALL COORDINATE TEMPORARY LAYDOWN AREA WITH HAWAII DEPARTMENT OF LAND AND NATURAL RESOURCES, DIVISION OF BOATING AND OCEAN RECREATION DISTRICT MANAGEMENT.
4. CONTRACTOR WILL BE RESPONSIBLE FOR RESTORING LAYDOWN AREA TO EXISTING OR BETTER CONDITION.

LEGEND:

- REMOVE OR DEMOLISH AS INDICATED
- LIMITS OF DEMOLITION AND REMOVAL
- TYPE 2 DOT TURBIDITY CURTAIN
- FILTER SOCK
- TO BE REMOVED
- DIRECTION OF FLOW
- B-2 BORING LOCATION

REVISION NO.	SYM.	DESCRIPTION	SHT./OF	DATE	APPROVED

CHRIS J. NAKAMURA
LICENSED PROFESSIONAL ENGINEER
No. 11666-C
HAWAII, U.S.A.

THIS WORK WAS PREPARED BY ME OR UNDER MY SUPERVISION AND CONSTRUCTION OF THIS PROJECT WILL BE UNDER MY OBSERVATION.

SIGNATURE — EXP. DATE OF THE LICENSE 4/30/2026

STATE OF HAWAII
DEPARTMENT OF LAND AND NATURAL RESOURCES
DIVISION OF BOATING AND OCEAN RECREATION

KIKIALOA SMALL BOAT HARBOR
NEW BOAT RAMP

EXISTING SITE, BMP, AND DEMOLITION PLAN

DESIGNED: CT, DK	SUBMITTED:
DRAWN: CT, DK, EU	DATE: 5/3/2024
CHECKED: CN	SCALE: AS NOTED
APPROVED: CHIEF ENGINEER — DATE	DRAWING NO. C-201

MAY 3, 2024

KIKIAOLA SMALL BOAT HARBOR NEW BOAT RAMP

PM: KO
OPER: DKASHIMA
DATE: 09/14/2023
SCALE: AS SHOWN
FILE: B95CK72A-00C-201.dwg REVISED:05/03/2024

POH-2024-00105, Waimea Bay
Hawaii Department of Land and Natural Resources
- New Boat Ramp at Kikiaola Small Boat Harbor
Drawings dated May 06, 2025
Sheet 6 of 36

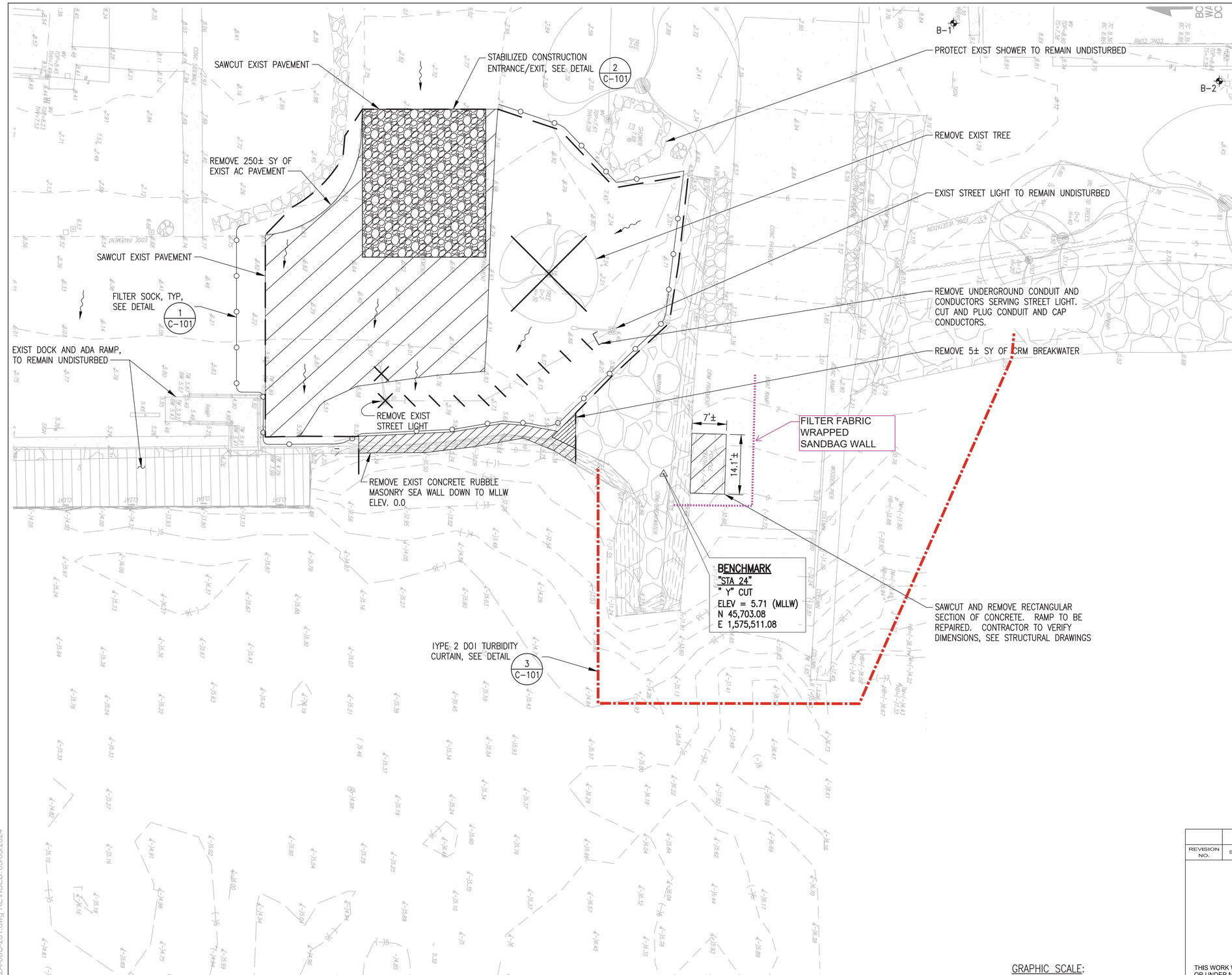

NOTES:

1. THE CONTRACTOR SHALL REMOVE ALL PAVEMENTS, STRUCTURES, VEGETATION, SIGNS AND POSTS, RUBBISH AND OTHER OBSTRUCTIONS WITHIN THE LIMIT OF DEMOLITION AND REMOVAL, UNLESS CALLED OUT TO REMAIN UNDISTURBED ON THIS PLAN.
2. FOR DEMOLITION OF STREET LIGHT AND ELECTRICAL CONDUITS, THE CONTRACTOR SHALL COORDINATE WORK WITH RESPECTIVE UTILITY COMPANY.
3. CONTRACTOR SHALL COORDINATE TEMPORARY LAYDOWN AREA WITH HAWAII DEPARTMENT OF LAND AND NATURAL RESOURCES, DIVISION OF BOATING AND OCEAN RECREATION DISTRICT MANAGEMENT.
4. CONTRACTOR WILL BE RESPONSIBLE FOR RESTORING LAYDOWN AREA TO EXISTING OR BETTER CONDITION.

LEGEND:

- REMOVE OR DEMOLISH AS INDICATED
- TYPE 2 DOT TURBIDITY CURTAIN
- FILTER SOCK
- TO BE REMOVED
- DIRECTION OF FLOW
- B-2 BORING LOCATION

EXISTING SITE, BMP, AND DEMOLITION PLAN

SCALE: 1" = 10'

PLAN NORTH

GRAPHIC SCALE:

10' 5' 0' 10' 20'

SCALE: 1" = 10'

REVISION NO.	SYM.	DESCRIPTION	SHT./OF	DATE	APPROVED

STATE OF HAWAII
DEPARTMENT OF LAND AND NATURAL RESOURCES
DIVISION OF BOATING AND OCEAN RECREATION

KIKIALOA SMALL BOAT HARBOR
NEW BOAT RAMP

EXISTING SITE, BMP, AND DEMOLITION PLAN

THIS WORK WAS PREPARED BY ME OR UNDER MY SUPERVISION AND CONSTRUCTION OF THIS PROJECT WILL BE UNDER MY OBSERVATION.

SIGNATURE EXP. DATE OF THE LICENSE

DESIGNED: CT, DK SUBMITTED:
DRAWN: CT, DK, EU DATE:
CHECKED: SCALE: AS NOTED
APPROVED:
CHIEF ENGINEER DATE
DRAWING NO. C-201B

MAY 3, 2024

KIKIAOLA SMALL BOAT HARBOR NEW BOAT RAMP

PM: KO
OPER: DKASHIMA
DATE: 09/14/2023
SCALE: AS SHOWN
FILE: B95CK72A-00C-201.dwg REVISED: 05/03/2024

POH-2024-00105, Waimea Bay
Hawaii Department of Land and Natural Resources
- New Boat Ramp at Kikiaola Small Boat Harbor
Drawings dated May 06, 2025
sheet 7 of 36

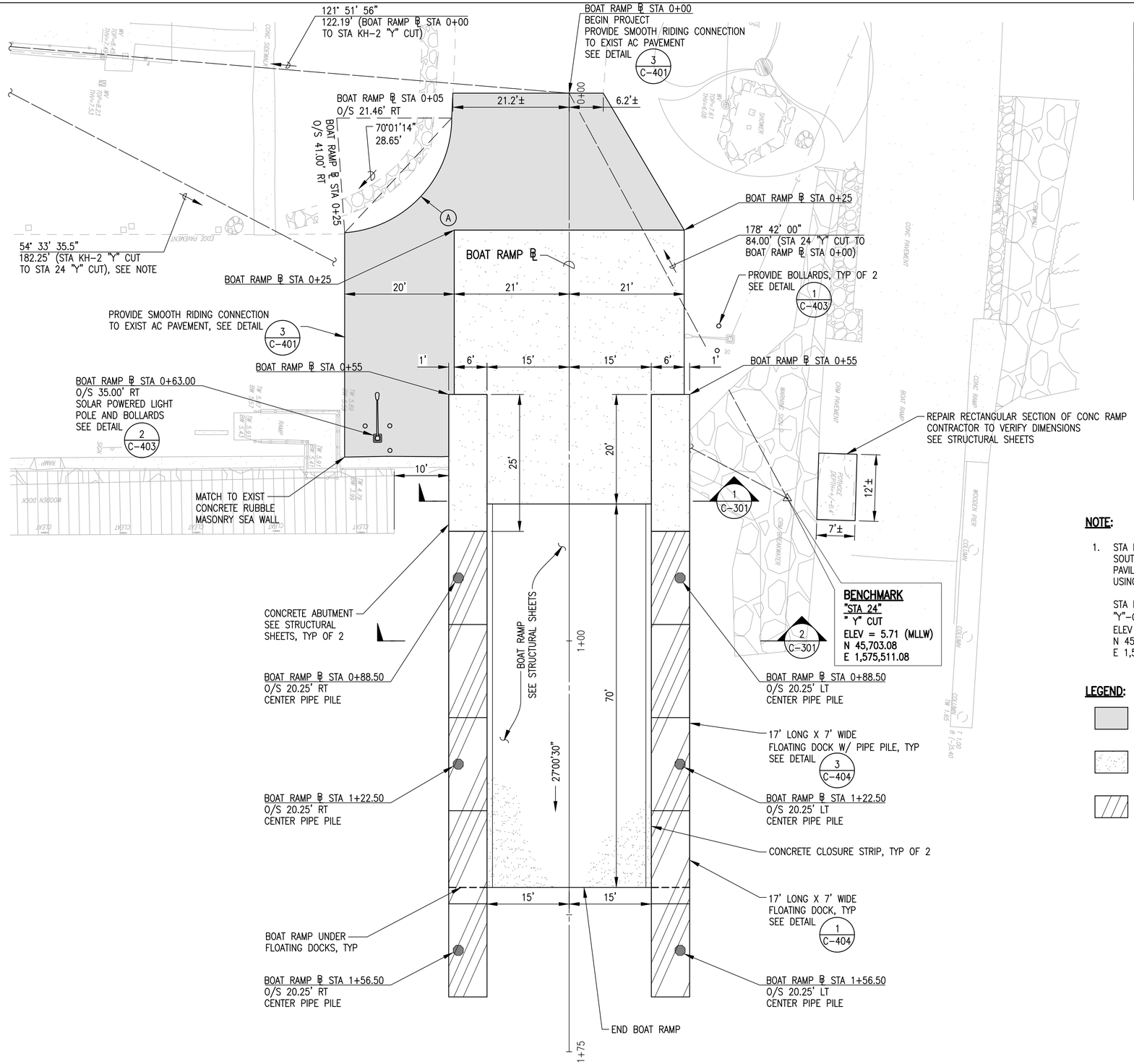

SITE PLAN
SCALE: 1" = 10'

AC PAVEMENT CURVE DATA	
CURVE	A
Δ	86° 01' 29"
Δ/2	43° 00' 44"
R	21.00'
T	19.59'
Ch	28.65'
Lc	31.53'

NOTE:

1. STA KH-2 "Y" CUT IS LOCATED ON THE SOUTH WEST CORNER OF THE COVERED PAVILION. STA KH-2 CAN BE FOUND USING THE FOLLOWING INFORMATION:

   STA KH-2
   "Y"-CUT
   ELEV = 8.08 (MLLW)
   N 45,851.56
   E 1,575,405.40

LEGEND:

- AC PAVEMENT, SEE DETAIL 1 C-402
- PCC PAVEMENT, SEE DETAIL 2 C-402
- ALUMINUM FRAMED FLOATING DOCKS, SEE DETAIL 1 C-404

GRAPHIC SCALE:
10' 5' 0' 10' 20'
SCALE: 1" = 10'

REVISION NO.	SYM.	DESCRIPTION	SHT./OF	DATE	APPROVED

CHRIS J. NAKAMURA
LICENSED PROFESSIONAL ENGINEER
No. 11666-C
HAWAII, U.S.A.

THIS WORK WAS PREPARED BY ME OR UNDER MY SUPERVISION AND CONSTRUCTION OF THIS PROJECT WILL BE UNDER MY OBSERVATION.

SIGNATURE — EXP. DATE OF THE LICENSE 4/30/2026

STATE OF HAWAII
DEPARTMENT OF LAND AND NATURAL RESOURCES
DIVISION OF BOATING AND OCEAN RECREATION

KIKIALOA SMALL BOAT HARBOR
NEW BOAT RAMP

SITE PLAN

DESIGNED: CT, DK — SUBMITTED:
DRAWN: CT, DK, EU — DATE: 5/3/2024
CHECKED: CN — SCALE: AS NOTED
APPROVED: — DRAWING NO. C-202
CHIEF ENGINEER — DATE

MAY 3, 2024

KIKIAOLA SMALL BOAT HARBOR NEW BOAT RAMP

PM: KO
OPER: CTANGONAN
REVISED: 05/03/2024
DATE: 09/14/2023
SCALE: AS SHOWN
FILE: B95CK72A-00C-202.dwg

POH-2024-00105, Waimea Bay
Hawaii Department of Land and Natural Resources
- New Boat Ramp at Kikiaola Small Boat Harbor
Drawings dated May 06, 2025
Sheet 8 of 36

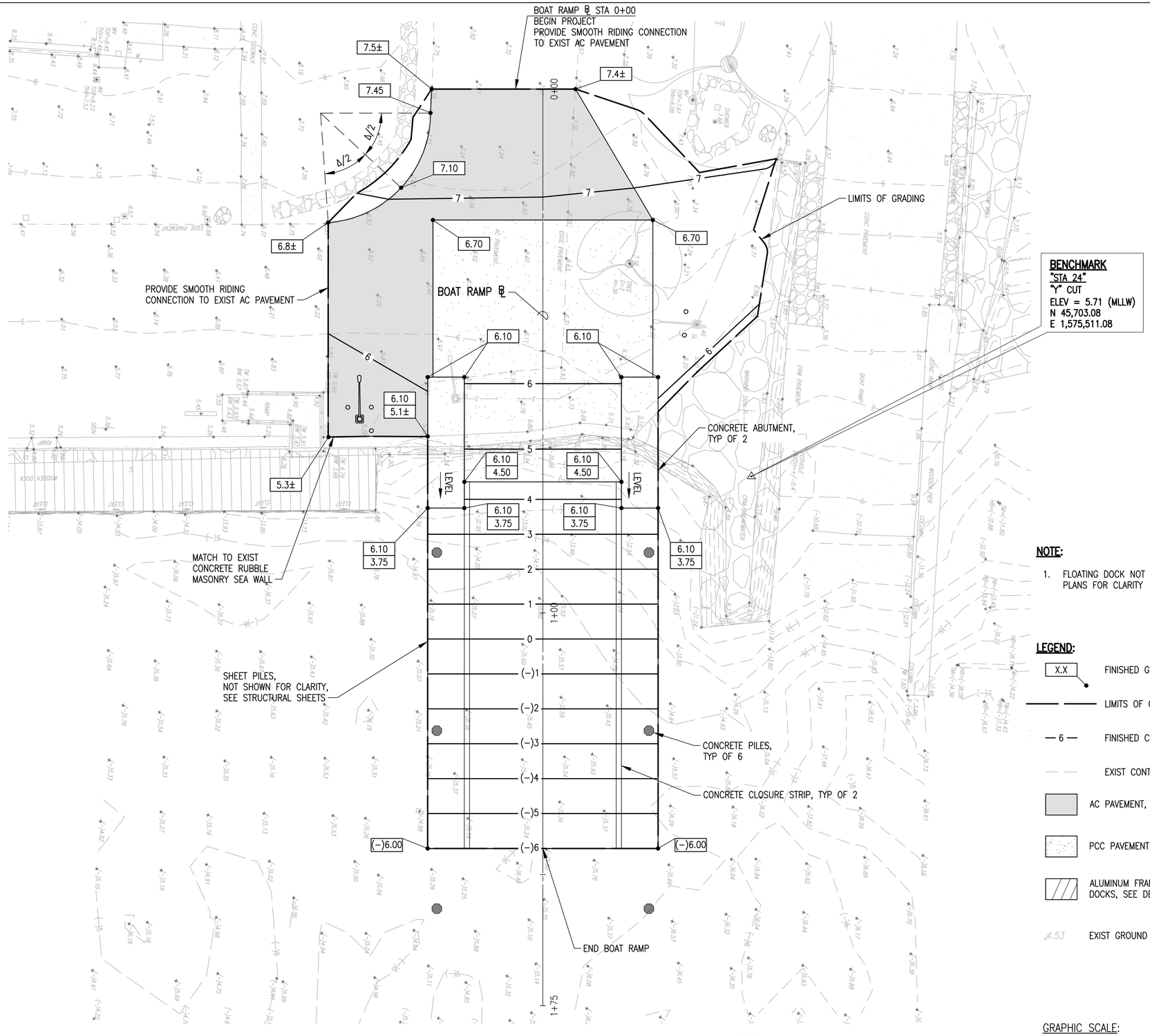

BENCHMARK
"STA 24"
"Y" CUT
ELEV = 5.71 (MLLW)
N 45,703.08
E 1,575,511.08

NOTE:

1. FLOATING DOCK NOT SHOWN ON PLANS FOR CLARITY

LEGEND:

X.X	FINISHED GRADE ELEVATION
	LIMITS OF GRADING
— 6 —	FINISHED CONTOUR
	EXIST CONTOUR
	AC PAVEMENT, SEE DETAIL 1/C-402
	PCC PAVEMENT, SEE DETAIL 2/C-402
	ALUMINUM FRAMED FLOATING DOCKS, SEE DETAIL 1/C-404
4.53	EXIST GROUND ELEVATION

GRAPHIC SCALE:

10' 5' 0' 10' 20'

SCALE: 1" = 10'

GRADING PLAN

SCALE: 1" = 10'

PLAN NORTH

REVISION NO.	SYM.	DESCRIPTION	SHT.OF	DATE	APPROVED

CHRIS J. NAKAMURA
LICENSED PROFESSIONAL ENGINEER
No. 11666-C
HAWAII, U.S.A.

THIS WORK WAS PREPARED BY ME OR UNDER MY SUPERVISION AND CONSTRUCTION OF THIS PROJECT WILL BE UNDER MY OBSERVATION.

SIGNATURE — EXP. DATE OF THE LICENSE 4/30/2026

STATE OF HAWAII
DEPARTMENT OF LAND AND NATURAL RESOURCES
DIVISION OF BOATING AND OCEAN RECREATION

KIKIALOA SMALL BOAT HARBOR
NEW BOAT RAMP

GRADING PLAN

DESIGNED: CT, DK	SUBMITTED:
DRAWN: CT, DK, EU	DATE: 5/3/2024
CHECKED: CN	SCALE: AS NOTED
APPROVED:	DRAWING NO. C-203
CHIEF ENGINEER	DATE

MAY 3, 2024

KIKIAOLA SMALL BOAT HARBOR NEW BOAT RAMP

DATE: 03/05/2024 PM: KO
SCALE: AS SHOWN OPER: CTANGONAN
FILE: B95CK72A-00C-203.dwg REVISED: 05/03/2024

POH-2024-00105, Waimea Bay
Hawaii Department of Land and Natural Resources
- New Boat Ramp at Kikiaola Small Boat Harbor
Drawings dated May 06, 2025
Sheet 9 of 36

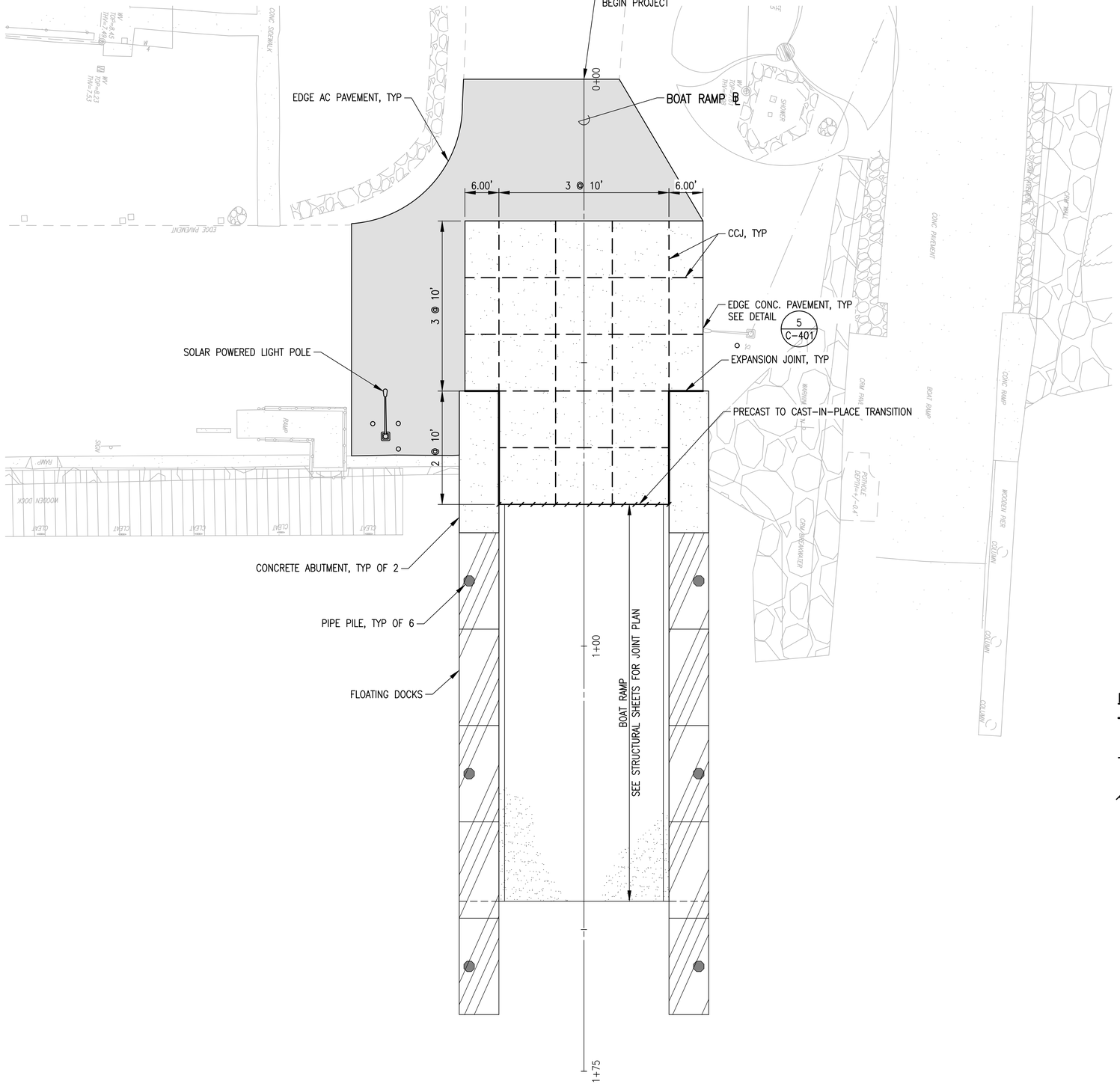

JOINTING PLAN

SCALE: 1" = 10'

PLAN NORTH

LEGEND:

- EXPANSION JOINT, SEE DETAIL 1 / C-401
- CONCRETE PAVEMENT AND CRACK CONTROL JOINT (CCJ), SEE DETAIL 4 / C-401
- PRECAST TO CAST-IN-PLACE TRANSITION, SEE DETAIL 6 / C-401
- AC PAVEMENT, SEE DETAIL 1 / C-402
- PCC PAVEMENT, SEE DETAIL 2 / C-402

GRAPHIC SCALE:

10' 5' 0' 10' 20'

SCALE: 1" = 10'

REVISION NO.	SYM.	DESCRIPTION	SHT./OF	DATE	APPROVED

CHRIS J. NAKAMURA
LICENSED PROFESSIONAL ENGINEER
No. 11666-C
HAWAII, U.S.A.

THIS WORK WAS PREPARED BY ME OR UNDER MY SUPERVISION AND CONSTRUCTION OF THIS PROJECT WILL BE UNDER MY OBSERVATION.

SIGNATURE — EXP. DATE OF THE LICENSE 4/30/2026

STATE OF HAWAII
DEPARTMENT OF LAND AND NATURAL RESOURCES
DIVISION OF BOATING AND OCEAN RECREATION

KIKIALOA SMALL BOAT HARBOR
NEW BOAT RAMP

JOINTING PLAN

DESIGNED: CT, DK — SUBMITTED:
DRAWN: CT, DK, EU — DATE: 5/3/2024
CHECKED: CN — SCALE: AS NOTED
APPROVED:
CHIEF ENGINEER — DATE
DRAWING NO. C-204

MAY 3, 2024

KIKIAOLA SMALL BOAT HARBOR NEW BOAT RAMP

DATE: 02/28/2024
SCALE: AS SHOWN
FILE: B95CK72A-00C-204.dwg
PM: KO
OPER: CTANGONAN
REVISED: 05/03/2024

POH-2024-00105, Waimea Bay
Hawaii Department of Land and Natural Resources
- New Boat Ramp at Kikiaola Small Boat Harbor
Drawings dated May 06, 2025
Sheet 10 of 36

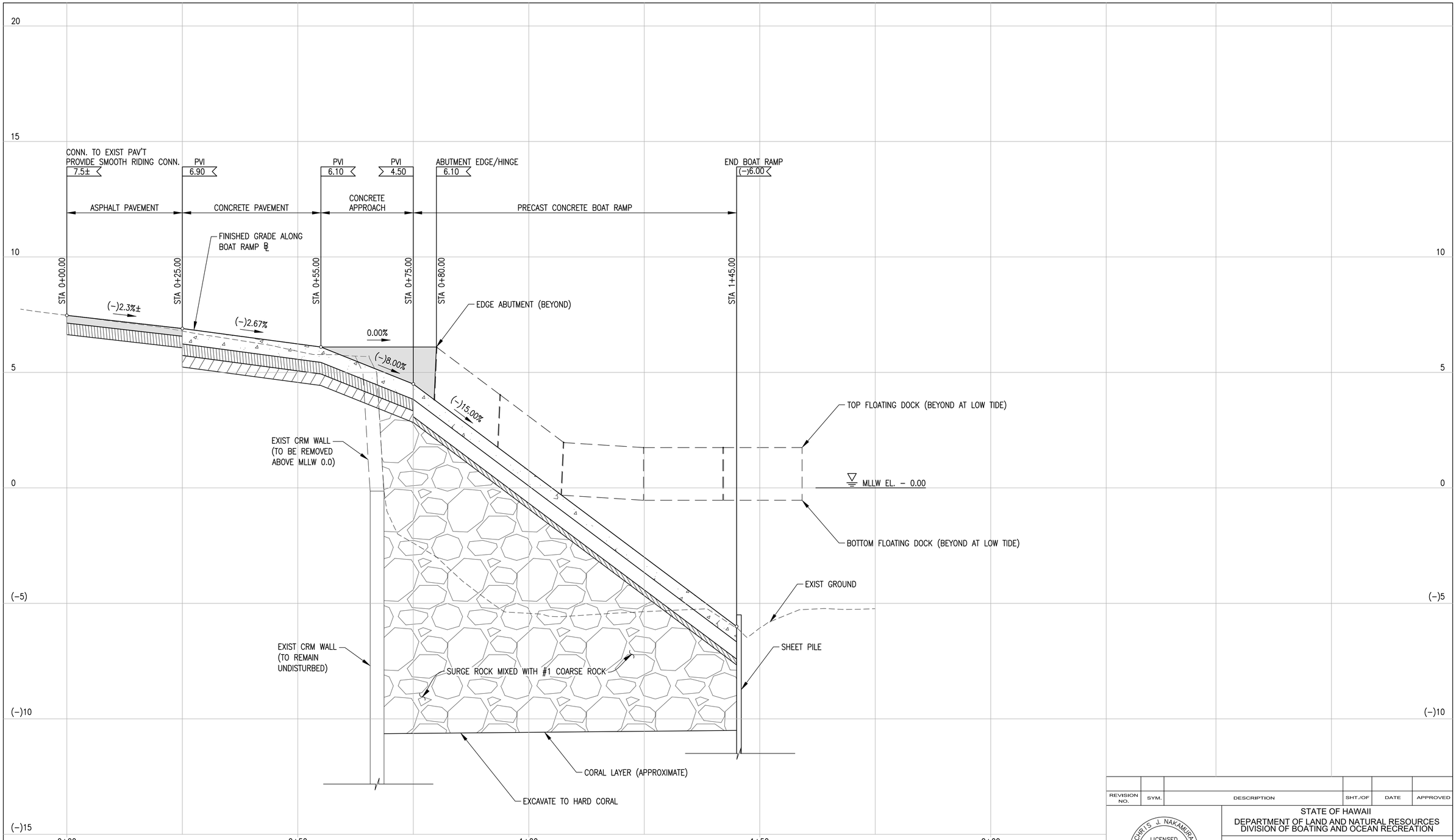

PROFILE - BOAT RAMP

SCALE: HORIZ: 1" = 10'
VERT: 1" = 2'

GRAPHIC SCALES:

10' 5' 0' 10' 20'
SCALE: 1" = 10'

2' 1' 0' 2' 4'
SCALE: 1" = 2'

REVISION NO.	SYM.	DESCRIPTION	SHT./OF	DATE	APPROVED

CHRIS J. NAKAMURA
LICENSED PROFESSIONAL ENGINEER
No. 11666-C
HAWAII, U.S.A.

THIS WORK WAS PREPARED BY ME OR UNDER MY SUPERVISION AND CONSTRUCTION OF THIS PROJECT WILL BE UNDER MY OBSERVATION.

SIGNATURE — 4/30/2026 EXP. DATE OF THE LICENSE

STATE OF HAWAII
DEPARTMENT OF LAND AND NATURAL RESOURCES
DIVISION OF BOATING AND OCEAN RECREATION

KIKIALOA SMALL BOAT HARBOR
NEW BOAT RAMP

PROFILE - BOAT RAMP

DESIGNED: CT, DK — SUBMITTED:
DRAWN: CT, DK, EU — DATE: 5/3/2024
CHECKED: CN — SCALE: AS NOTED
APPROVED:
CHIEF ENGINEER — DATE
DRAWING NO. C-205

MAY 3, 2024

KIKIAOLA SMALL BOAT HARBOR NEW BOAT RAMP

DATE: 09/29/2023 PM: KO
SCALE: AS SHOWN OPER: CTANGONAN
FILE: B95CK72A-00C-205.dwg REVISED: 05/03/2024

POH-2024-00105, Waimea Bay
Hawaii Department of Land and Natural Resources
- New Boat Ramp at Kikiaola Small Boat Harbor
Drawings dated May 06, 2025
Sheet 11 of 36

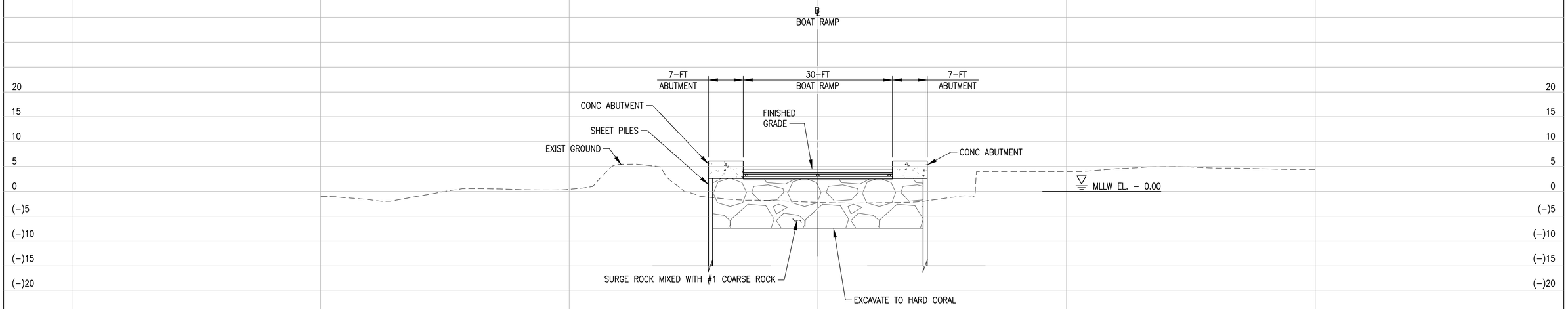

SECTION AT STA 0+75 (1)

SCALE: 1" = 10' C–202

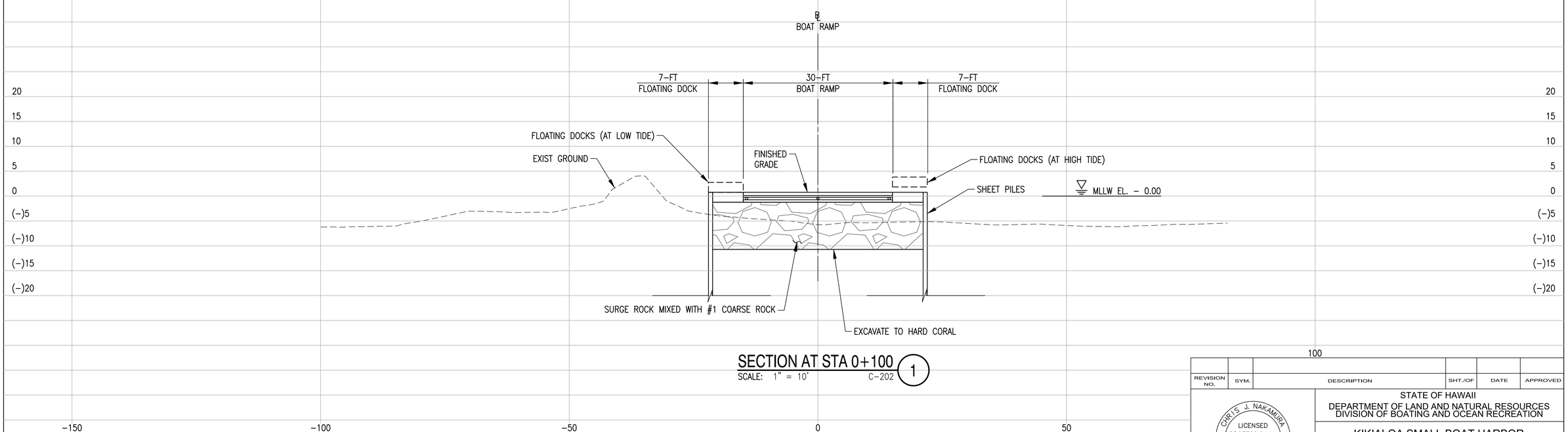

SECTION AT STA 0+100 (1)

SCALE: 1" = 10' C–202

SITE SECTIONS

SCALE: HORIZ: 1" = 10'
VERT: 1" = 10'

GRAPHIC SCALE:

10' 5' 0' 10' 20'

SCALE: 1" = 10'

REVISION NO.	SYM.	DESCRIPTION	SHT./OF	DATE	APPROVED

CHRIS J. NAKAMURA
LICENSED PROFESSIONAL ENGINEER
No. 11666-C
HAWAII, U.S.A.

THIS WORK WAS PREPARED BY ME OR UNDER MY SUPERVISION AND CONSTRUCTION OF THIS PROJECT WILL BE UNDER MY OBSERVATION.

SIGNATURE — EXP. DATE OF THE LICENSE 4/30/2026

STATE OF HAWAII
DEPARTMENT OF LAND AND NATURAL RESOURCES
DIVISION OF BOATING AND OCEAN RECREATION

KIKIALOA SMALL BOAT HARBOR
NEW BOAT RAMP

SITE SECTIONS

DESIGNED: CT, DK	SUBMITTED:
DRAWN: CT, DK, EU	DATE: 5/3/2024
CHECKED: CN	SCALE: AS NOTED
APPROVED:	DRAWING NO. C-301
CHIEF ENGINEER — DATE	

POH-2024-00105, Waimea Bay
Hawaii Department of Land and Natural Resources
- New Boat Ramp at Kikiaola Small Boat Harbor
Drawings dated May 06, 2025
Sheet 12 of 36

DATE: 03/14/2024
SCALE: AS SHOWN
FILE: B95CK72A-00C-301.dwg
PM: KO
OPER: CTANGONAN
REVISED: 05/03/2024

MAY 3, 2024

KIKIAOLA SMALL BOAT HARBOR NEW BOAT RAMP

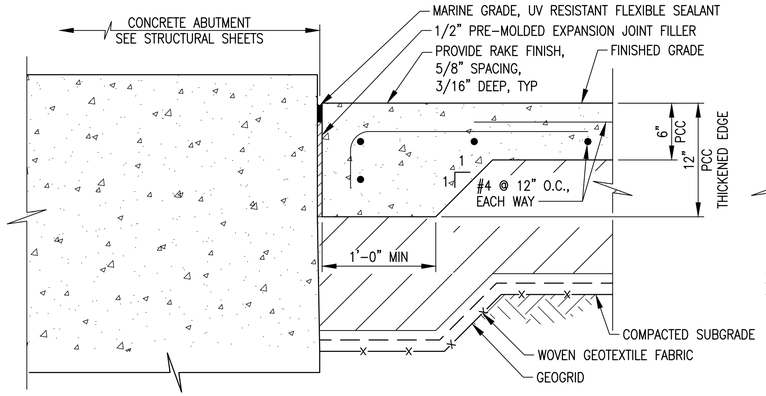

EXPANSION JOINT DETAIL (1)

SCALE: NOT TO SCALE C-204

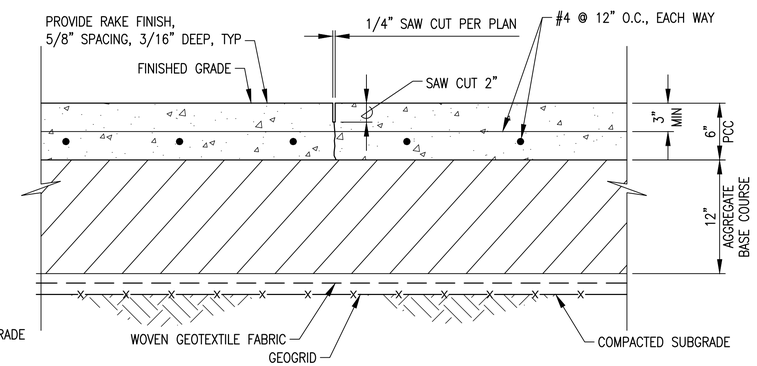

CONCRETE PAVEMENT AND CRACK CONTROL JOINT (CCJ) (4)

SCALE: NOT TO SCALE C-204

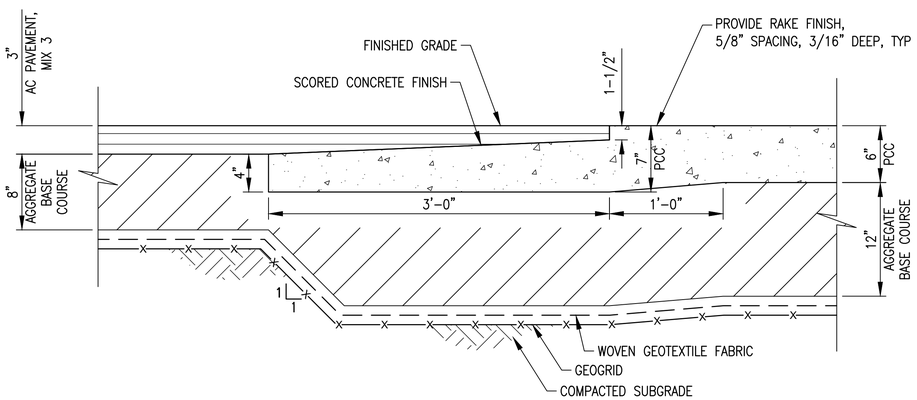

AC TO CONCRETE CONNECTION (2)

SCALE: NOT TO SCALE C-204

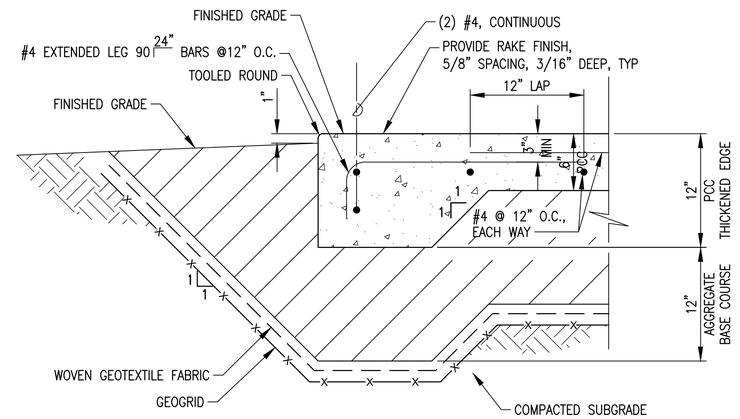

CONCRETE PAVEMENT EDGE (5)

SCALE: NOT TO SCALE C-204

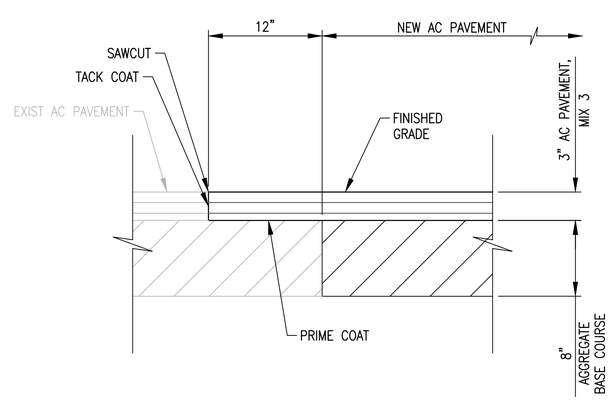

SMOOTH RIDING CONNECTION TO EXISTING AC PAVEMENT (3)

SCALE: NOT TO SCALE C-202

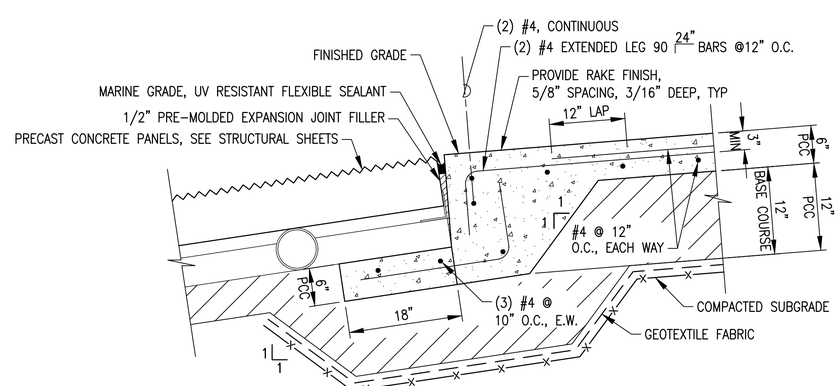

PRECAST TO CAST IN PLACE TRANSITION DETAIL (6)

SCALE: NOT TO SCALE C-204

NOTES:

1. UNLESS OTHERWISE NOTES, MINIMUM THICKNESS OF CONCRETE PAVEMENT SHALL BE 6 INCHES.
2. SUBGRADE SHALL BE COMPACTED TO 90% MAX. DRY DENSITY.
3. AGGREGATE BASE COURSE SHALL BE COMPACTED TO 95% MAX. DRY DENSITY.

REVISION NO.	SYM.	DESCRIPTION	SHT./OF	DATE	APPROVED

CHRIS J. NAKAMURA
LICENSED PROFESSIONAL ENGINEER
No. 11666-C
HAWAII, U.S.A.

THIS WORK WAS PREPARED BY ME OR UNDER MY SUPERVISION AND CONSTRUCTION OF THIS PROJECT WILL BE UNDER MY OBSERVATION.

SIGNATURE — EXP. DATE OF THE LICENSE 4/30/2026

STATE OF HAWAII
DEPARTMENT OF LAND AND NATURAL RESOURCES
DIVISION OF BOATING AND OCEAN RECREATION

KIKIALOA SMALL BOAT HARBOR
NEW BOAT RAMP

CIVIL DETAILS - 1

DESIGNED: CT, DK	SUBMITTED:
DRAWN: CT, DK, EU	DATE: 5/3/2024
CHECKED: CN	SCALE: AS NOTED
APPROVED:	DRAWING NO. C-401
CHIEF ENGINEER	DATE

POH-2024-00105, Waimea Bay
Hawaii Department of Land and Natural Resources
- New Boat Ramp at Kikiaola Small Boat Harbor
Drawings dated May 06, 2025
Sheet 13 of 36

DATE: 03/04/2024 PM: KO
SCALE: AS SHOWN OPER: CTANGONAN
FILE: B95CK72A-00C-401.dwg REVISED:05/03/2024

MAY 3, 2024

KIKIAOLA SMALL BOAT HARBOR NEW BOAT RAMP

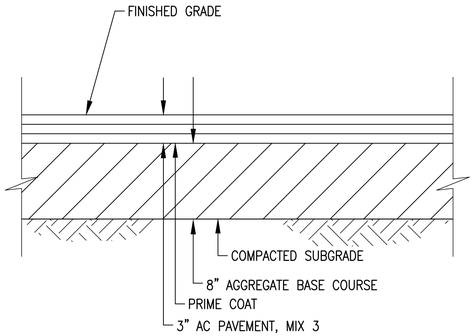

TYPICAL AC PAVEMENT SECTION (1)

SCALE: NOT TO SCALE C-202

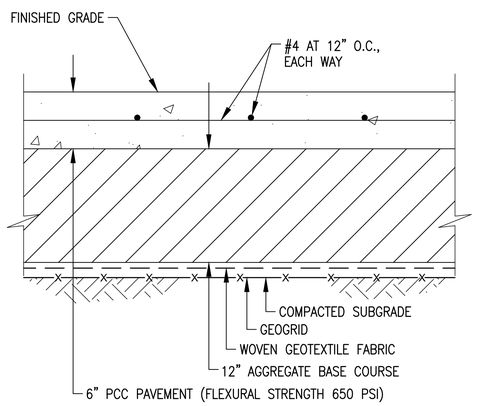

TYPICAL CONCRETE PAVEMENT SECTION (2)

SCALE: NOT TO SCALE C-202

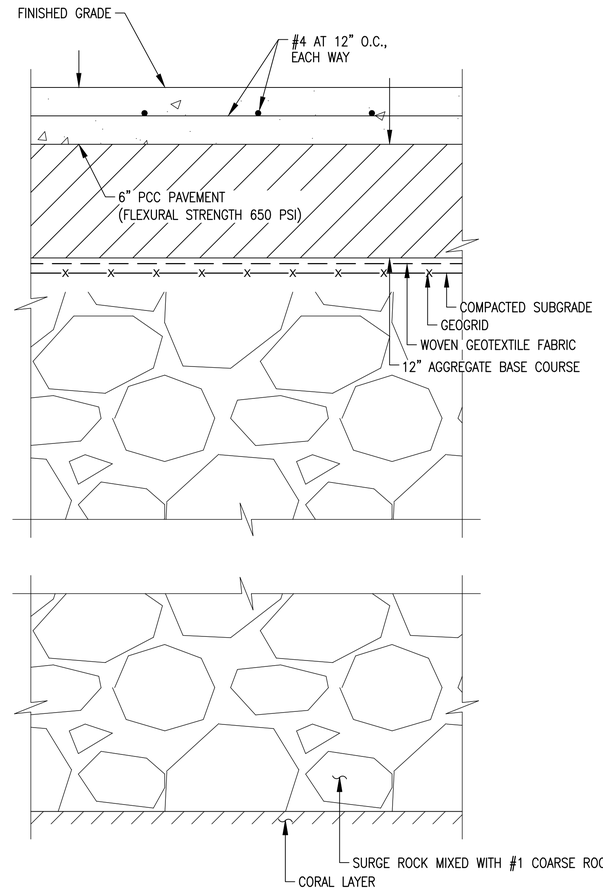

TYPICAL CONCRETE PAVEMENT SECTION OVER SURGE ROCK (3)

SCALE: NOT TO SCALE C-202

NOTES:

1. UNLESS OTHERWISE NOTES, MINIMUM THICKNESS OF CONCRETE PAVEMENT SHALL BE 6 INCHES.
2. SUBGRADE SHALL BE COMPACTED TO 90% MAX. DRY DENSITY.
3. AGGREGATE BASE COURSE SHALL BE COMPACTED TO 95% MAX. DRY DENSITY.

REVISION NO.	SYM.	DESCRIPTION	SHT./OF	DATE	APPROVED

CHRIS J. NAKAMURA LICENSED PROFESSIONAL ENGINEER No. 11666-C HAWAII, U.S.A.

THIS WORK WAS PREPARED BY ME OR UNDER MY SUPERVISION AND CONSTRUCTION OF THIS PROJECT WILL BE UNDER MY OBSERVATION.

SIGNATURE — EXP. DATE OF THE LICENSE 4/30/2026

STATE OF HAWAII
DEPARTMENT OF LAND AND NATURAL RESOURCES
DIVISION OF BOATING AND OCEAN RECREATION

KIKIALOA SMALL BOAT HARBOR
NEW BOAT RAMP

CIVIL DETAILS - 2

DESIGNED: CT, DK	SUBMITTED:
DRAWN: CT, DK, EU	DATE: 5/3/2024
CHECKED: CN	SCALE: AS NOTED
APPROVED:	DRAWING NO. C-402
CHIEF ENGINEER	DATE

MAY 3, 2024

KIKIAOLA SMALL BOAT HARBOR NEW BOAT RAMP

DATE: 03/04/2024 PM: KO
SCALE: AS SHOWN OPER: CTANGONAN
FILE: B95CK72A-00C-401.dwg REVISED: 05/03/2024

POH-2024-00105, Waimea Bay
Hawaii Department of Land and Natural Resources
- New Boat Ramp at Kikiaola Small Boat Harbor
Drawings dated May 06, 2025
Sheet 14 of 36

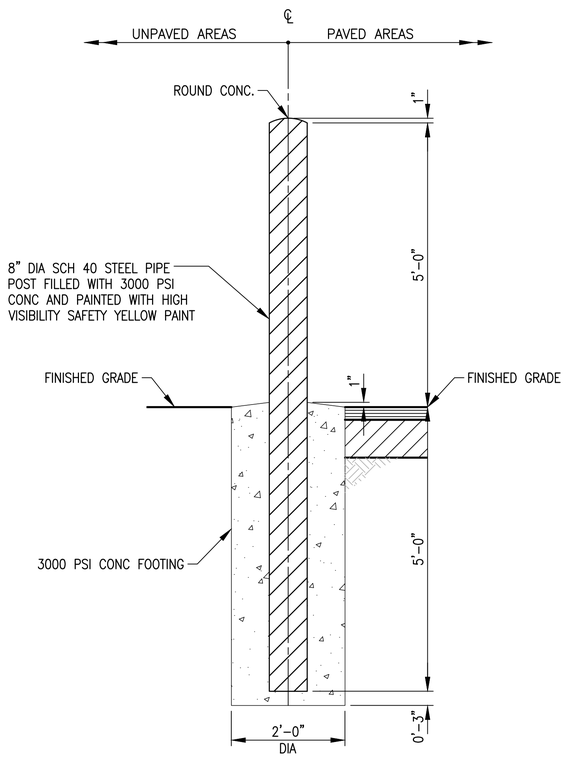

8 - INCH BOLLARD DETAIL

NOT TO SCALE C-402 (1)

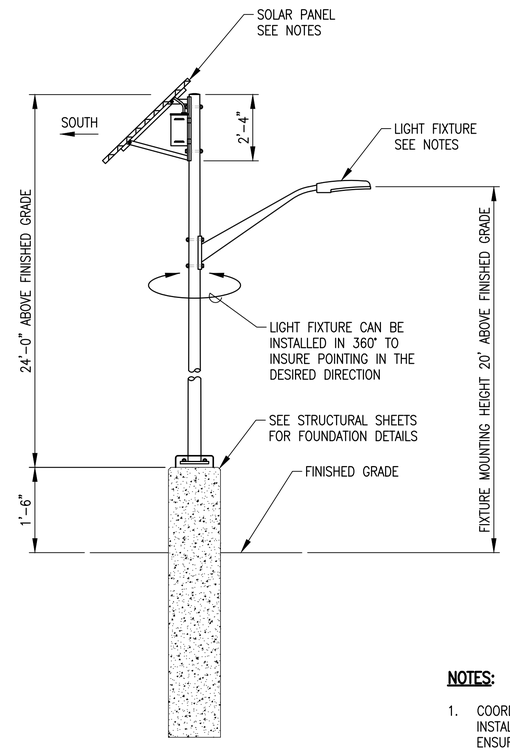

ELEVATION

NOTES:

1. COORDINATE CONSTRUCTION AND INSTALLATION OF FOUNDATION TO ENSURE SOLAR PANEL FACES SOUTH.
2. ALL POLE WIRING IS ROUTED INSIDE THE POLE.

STREET SIDE

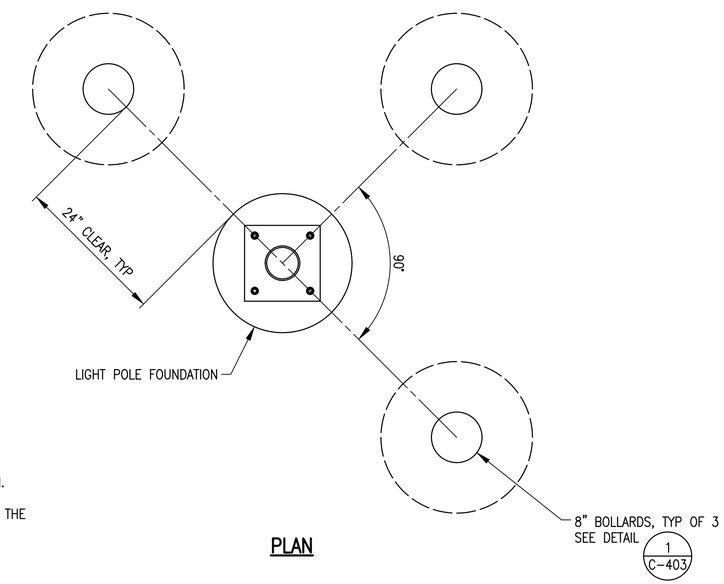

PLAN

SOLAR POWERED LIGHT POLE DETAIL

NOT TO SCALE C-202 (2)

GRAPHIC SCALE:

5' 2.5' 0' 5' 10'

SCALE: 1" = 5'

REVISION NO.	SYM.	DESCRIPTION	SHT./OF	DATE	APPROVED

CHRIS J. NAKAMURA LICENSED PROFESSIONAL ENGINEER No. 11666-C HAWAII, U.S.A.

THIS WORK WAS PREPARED BY ME OR UNDER MY SUPERVISION AND CONSTRUCTION OF THIS PROJECT WILL BE UNDER MY OBSERVATION.

SIGNATURE — EXP. DATE OF THE LICENSE 4/30/2026

STATE OF HAWAII
DEPARTMENT OF LAND AND NATURAL RESOURCES
DIVISION OF BOATING AND OCEAN RECREATION

KIKIALOA SMALL BOAT HARBOR
NEW BOAT RAMP

CIVIL DETAILS - 3

DESIGNED: CT, DK — SUBMITTED:
DRAWN: CT, DK, EU — DATE: 5/3/2024
CHECKED: CN — SCALE: AS NOTED
APPROVED: CHIEF ENGINEER — DATE
DRAWING NO. C-403

POH-2024-00105, Waimea Bay
Hawaii Department of Land and Natural Resources
- New Boat Ramp at Kikiaola Small Boat Harbor
Drawings dated May 06, 2025
Sheet 15 of 36

DATE: 03/04/2024 PM: KO
SCALE: AS SHOWN OPER: CTANGONAN
FILE: B95CK72A-00C-401.dwg REVISED: 05/03/2024

MAY 3, 2024

KIKIAOLA SMALL BOAT HARBOR NEW BOAT RAMP

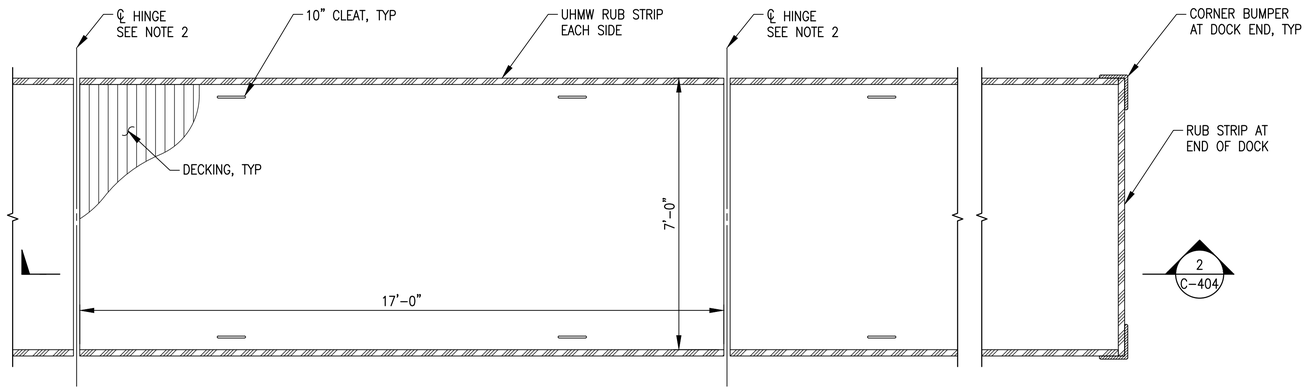

DOCK PLAN

SCALE: NOT TO SCALE C-202 (1)

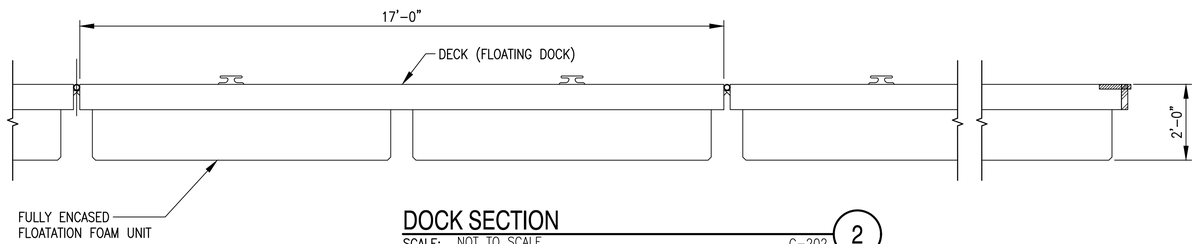

DOCK SECTION

SCALE: NOT TO SCALE C-202 (2)

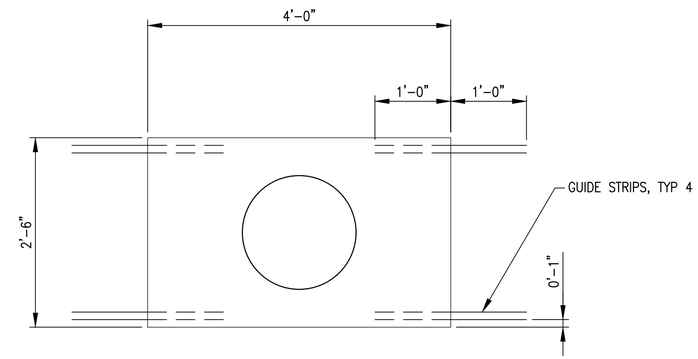

SLIDING PILE YOKE COVER

SCALE: NOT TO SCALE C-202 (5)

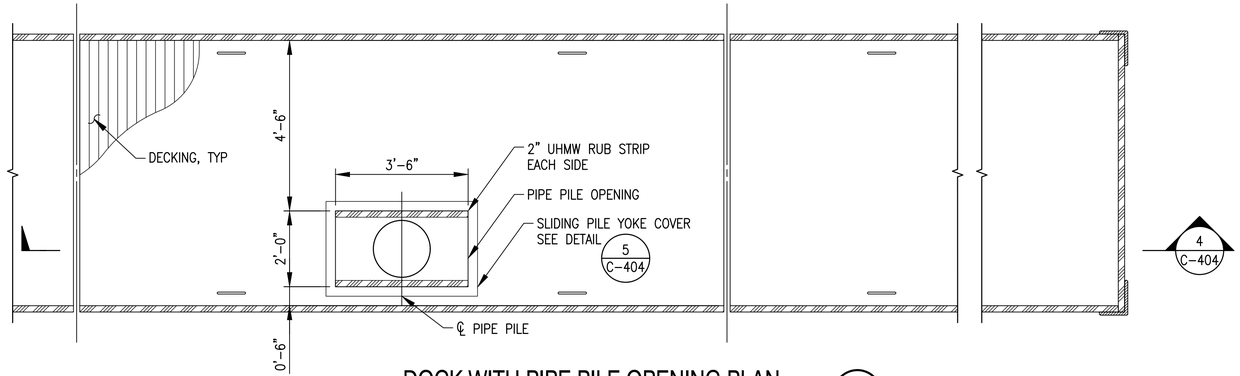

DOCK WITH PIPE PILE OPENING PLAN

SCALE: NOT TO SCALE C-202 (3)

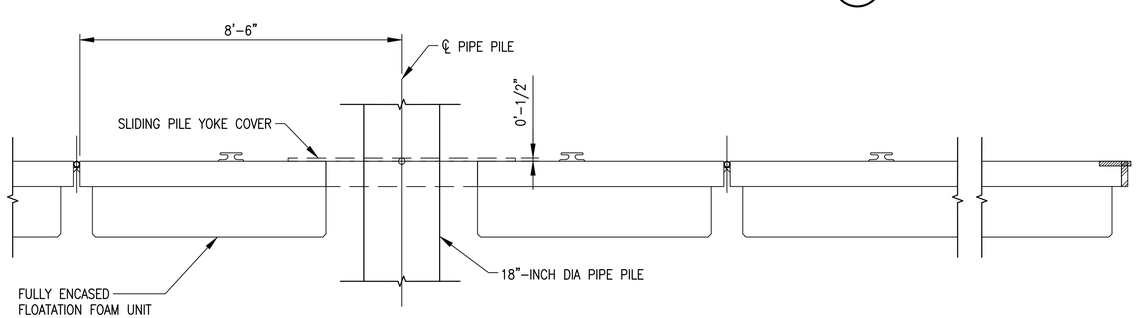

DOCK WITH PIPE PILE OPENING SECTION

SCALE: NOT TO SCALE C-202 (4)

NOTES:

1. CONTRACTOR SHALL DESIGN THE DOCKS TO PROVIDE THE REQUIRED FREEBOARD IN ACCORDANCE WITH THE REQUIREMENTS OF THE CONTRACT DOCUMENTS AND SUBMIT SHOP DRAWINGS AND CALCULATIONS TO THE ENGINEER FOR REVIEW AND APPROVAL PRIOR TO FABRICATION.
2. HINGE LAYOUT IS SCHEMATIC ONLY.
3. LATERAL CLEARANCE FOR GUIDE PILE RUB STRIP IS 1/2-INCH MINIMUM AND 1-INCH MAXIMUM.
4. GUIDE PILE RUB STRIP CLEARANCE AT DESIGN HIGH WATER AND DESIGN LOW WATER IS 1/2-INCH MINIMUM AND 1-INCH MAXIMUM ACCORDING TO THE RELATIVE LOCATION OF THE GUIDE PILE AT EACH WATER SURFACE ELEVATION.
5. UHMW GUIDE PILE RUB STRIP SHALL HAVE A MINIMUM THICKNESS OF 2-INCHES.

REVISION NO.	SYM.	DESCRIPTION	SHT./OF	DATE	APPROVED

CHRIS J. NAKAMURA
LICENSED PROFESSIONAL ENGINEER
No. 11666-C
HAWAII, U.S.A.

THIS WORK WAS PREPARED BY ME OR UNDER MY SUPERVISION AND CONSTRUCTION OF THIS PROJECT WILL BE UNDER MY OBSERVATION.

SIGNATURE — EXP. DATE OF THE LICENSE 4/30/2026

STATE OF HAWAII
DEPARTMENT OF LAND AND NATURAL RESOURCES
DIVISION OF BOATING AND OCEAN RECREATION

KIKIALOA SMALL BOAT HARBOR
NEW BOAT RAMP

FLOATING DOCK DETAILS

DESIGNED: CT, DK — SUBMITTED:
DRAWN: CT, DK, EU — DATE: 5/3/2024
CHECKED: CN — SCALE: AS NOTED
APPROVED:
CHIEF ENGINEER — DATE
DRAWING NO. C-404

KIKIAOLA SMALL BOAT HARBOR NEW BOAT RAMP

MAY 3, 2024

DATE: 03/27/2024 SCALE: AS SHOWN FILE: B95CK72A-00C-403.dwg PM: KO OPER: CTANGONAN REVISED 05/03/2024

POH-2024-00105, Waimea Bay
Hawaii Department of Land and Natural Resources
- New Boat Ramp at Kikiaola Small Boat Harbor
Drawings dated May 06, 2025
Sheet 16 of 36

STRUCTURAL GENERAL NOTES

1. DESIGN SPECIFICATIONS:

   A. ALL WORK SHALL CONFORM TO THE 2018 INTERNATIONAL BUILDING CODE.

   B. ACI 318 BUILDING CODE REQUIREMENTS FOR REINFORCED CONCRETE (LATEST EDITION).

2. DESIGN DATA:

   A. LIVE LOAD

      (1) RAMP: 100 PSF

      (2) DOCK: 100 PSF

   B. WIND CRITERIA

      (1) BASIC WIND SPEED: 110 MPH

      (2) WIND EXPOSURE: D

3. EARTHWORK:

   A. A PROJECT REPORT HAS BEEN PREPARED BY GEOLABS, INC., TITLED "KIKIAOLA SMALL BOAT HARBOR – BOAT RAMP REPLACEMENT, PRELIMINARY GEOTECHNICAL RECOMMENDATIONS", DATED MAY 3, 2024.

4. MATERIALS:

   A. ALL CONCRETE STRENGTHS SHALL BE AS NOTED BELOW:

	ELEMENT	COMPRESSIVE STRENGTH, f'c (28 DAYS)	MAXIMUM WATER/ CEMENTITIOUS (W/C)	MAXIMUM CEMENTITIOUS MATERIAL CONTENT (LBS/CY)	INCLUDED ADMIXTURES (SEE NOTES BELOW IN THIS SECTION)
(1)	PRECAST AND CAST-IN-PLACE CONCRETE SLAB, CLOSURE POUR, WHEEL STOP	6,000 PSI	0.40	670	B, C, E
(2)	PIPE PILE CONCRETE CORE, ABUTMENT	5,000 PSI	0.45	670	B, C
(3)	ALL OTHERS EXCEPT AS NOTED OTHERWISE	5,000 PSI	0.45	–	B, C
(4)	UNDERWATER CONCRETE	5,000 PSI	0.45	–	B, C, D, E

   B. AMINE CARBOXYLATE CORROSION INHIBITING WATER-BASED ADMIXTURE SUCH AS CORTEC MCI 2005 NS OR APPROVED SUBSTITUTE SHALL BE ADDED AT A DOSAGE OF 24 OUNCES PER CUBIC YARD.

   C. SHRINKAGE REDUCING ADMIXTURE SUCH AS ECLIPSE 4500 OR MASTERLIFE SRA 20 OR APPROVED SUBSTITUTE SHALL BE ADDED AT A DOSAGE OF 128 OUNCES PER CUBIC YARD OR AS RECOMMENDED BY THE MANUFACTURER.

   D. CONCRETE PLACED IN OR BELOW WATER WHILE PLASTIC SHALL CONTAIN A VISCOSITY MODIFYING ADMIXTURE (VMA) TO PREVENT WASHOUT OF CEMENT DURING CONCRETE PLACEMENT.

   E. A 1 1/2" LONG MACRO SYNTHETIC FIBER SUCH AS FORTA FERRO, STRUX 90/40, MASTERFIBER MAC MATRIX OR APPROVED EQUAL SHALL BE ADDED TO THE CONCRETE MIX. THE DOSAGE SHALL BE 7.5 LBS. PER CUBIC YARD OF CONCRETE OR THE EQUIVALENT AMOUNT OF APPROVED EQUAL TO ACHIEVE SIMILAR PROPERTIES.

   F. THE USE OF CALCIUM CHLORIDE IN ANY CONCRETE IS PROHIBITED.

   G. ALL CONCRETE EXPOSED WITHIN 7 DAYS OF PLACEMENT SHALL BE CURED USING SINAK LITHIUM CURE OR APPROVED SUBSTITUTE AT A COVERAGE RATE OF NO LESS THAN 400 SQ. FT. PER GALLON.

   H. GROUT SHALL HAVE A MINIMUM 28 DAYS COMPRESSIVE STRENGTH OF 4,000 PSI AND WITH 1% OF CEMENT WEIGHT OF PRO-TREMIE ADMIXTURE FOR UNDERWATER PLACEMENT.

   I. GROUT INJECTION HOLES SHALL BE CONSTRUCTED WITH THREADED INSERTS TO ACCOMMODATE 1-1/2" I.D. PRESSURE PIPE WITH CLAMP FITTINGS SUITABLE FOR GROUT INJECTION AT 100 PSI.

4. MATERIALS (CONT.)

   I. GLASS FIBER REINFORCED POLYMER (GFRP) REBAR (ASTM D7957) DEFORMED BARS, UNLESS NOTED OTHERWISE.

      (1) GLASS FIBER REINFORCED POLYMER (GFRP) REBAR SHALL HAVE A MINIMUM TENSILE FORCE OF 110 KSI FOR #4 BARS. #5 BARS SHALL HAVE A MINIMUM TENSILE FORCE OF 105 KSI.

      (2) THE MODULUS OF ELASTICITY OF THE GFRP BAR SHALL BE A MINIMUM OF 6,500,000 PSI.

      (3) GFRP BAR SHALL BE SAND COATED.

      (4) MINIMUM CONCRETE COVER FOR THE GFRP BARS SHALL BE 1 1/2" UNLESS OTHERWISE NOTED.

      (5) MINIMUM LAP SPLICE LENGTHS FOR THE GFRP BARS SHALL BE 42 BAR DIAMETERS UNLESS OTHERWISE NOTED.

      (6) ALL GFRP BARS SHALL BE SECURELY TIED IN PLACE. TIE WIRE SHALL BE ALLOY 302 OR 304 STAINLESS STEEL OR NON-METALLIC. FOLLOW GUIDELINES IN ACI SPEC-440.5-08 "SPECIFICATION FOR CONSTRUCTION WITH FIBER-REINFORCED POLYMER REINFORCING BARS.

      (7) GFRP BARS MAY BE CUT IN THE FIELD WITH A MASONRY OR DIAMOND BLADE, GRINDER OR FINE BLADE SAW.

      (8) ALL WORK INCLUDING MATERIALS AND BENDS SHALL FOLLOW MANUFACTURER'S RECOMMENDATIONS.

   J. ALL PLATES, WASHERS, NUTS, ANCHOR BOLTS, INSERTS, AND OTHER NECESSARY HARDWARE EXPOSED TO THE WEATHER FOR SECURING THE CHANNEL, CLEATS, AND PRECAST CONCRETE SHALL BE HOT-DIPPED GALVANIZED AFTER FABRICATION IN ACCORDANCE WITH ASTM A123/A123M-17.

   K. ANCHOR BOLTS, DOWELS, AND OTHER EMBEDDED ITEMS ARE TO BE SECURELY TIED IN PLACE BEFORE CONCRETE IS POURED.

   L. SHEET PILES SHALL BE ARBED AZ36, GRADE 50 OR APPROVED EQUAL.

5. REINFORCING STEEL:

   A. ALL REINFORCING STEEL SHALL BE ASTM A1035 TYPE CS GRADE 100 UNLESS OTHERWISE NOTED.

   B. EPOXY-COATED REINFORCING STEEL SHALL BE ASTM A775 WHERE NOTED ON THE PLANS. REPAIR DAMAGED COATING OR BARE REINFORCING OR HARDWARE PER MANUFACTURER'S RECOMMENDATIONS.

   C. REINFORCING STEEL SHALL BE ASTM A706 WHERE WELDED CONNECTIONS ARE REQUIRED.

   D. REINFORCING BARS SHALL BE PLACED AND INSTALLED IN ACCORDANCE WITH THE CRSI MANUAL OF STANDARD PRACTICE AND CRSI PLACING REINFORCING BARS, UNLESS OTHERWISE NOTED.

   E. THE MINIMUM COVERING MEASURED FROM THE SURFACE OF THE CONCRETE TO THE FACE OF REINFORCING BARS SHALL BE AS FOLLOWS, EXCEPT AS OTHERWISE SHOWN.

      (1) CONCRETE CAST AGAINST AND PERMANENTLY EXPOSED TO EARTH = 3".

      (2) ALL OTHERS UNLESS OTHERWISE NOTED = 3".

   F. MINIMUM CLEAR SPACING BETWEEN PARALLEL BARS SHALL BE 1 1/2 TIMES THE DIAMETER OF BARS (FOR NON BUNDLED BARS). IN NO CASE SHALL THE CLEAR DISTANCE BETWEEN THE BARS BE LESS THAN 1 1/2 TIMES THE MAXIMUM SIZE OF THE COARSE AGGREGATE OR 1 1/2".

   G. ALL DIMENSIONS RELATING TO REINFORCING BARS ARE TO CENTERS OF BARS UNLESS OTHERWISE NOTED.

   H. REINFORCING BARS SHALL BE SECURELY TIED AT ALL INTERSECTIONS AND LAP SPLICES EXCEPT WHERE THE SPACING OF INTERSECTIONS IS LESS THAN ONE FOOT IN EACH DIRECTION, IN WHICH CASE ALTERNATE INTERSECTIONS SHALL BE TIED.

   I. UNLESS OTHERWISE NOTED, MINIMUM SPLICE SHALL BE 50 BAR DIAMETERS OR 2'-0" WHICHEVER IS GREATER.

   J. FOR STEEL REINFORCING, STAGGER ALL SPLICES WHERE POSSIBLE.

   K. WELDING OF REINFORCING STEEL IS NOT PERMITTED UNLESS OTHERWISE SHOWN ON THE DRAWINGS.

   L. EMBEDDED METAL COMPONENTS MADE UP OF ALLOYS THAT ARE DIS-SIMILAR TO THAT OF THE REINFORCING STEEL SHALL NOT BE ATTACHED DIRECTLY TO REINFORCING. MEASURES SHALL BE TAKEN TO ELECTRICALLY ISOLATE SAID COMPONENTS FROM ANY REINFORCING TO PREVENT CATHODIC EFFECTS.

6. SPECIAL INSPECTION:

   A. ALL INSPECTIONS SHALL BE DONE PER I.B.C. SECTION 109, AND SPECIAL INSPECTION PROVISIONS OF SECTION 1704 OF THE 2018 INTERNATIONAL BUILDING CODE GOVERNING PORTIONS OF THE STRUCTURAL WORK SHOWN IN THE STRUCTURAL DRAWINGS.

   B. SPECIAL INSPECTION DOES NOT INTEND TO RELIEVE THE GENERAL CONTRACTOR OF HIS RESPONSIBILITIES TO COMPLETE THE PROJECT IN ACCORDANCE WITH THE PLANS AND SPECIFICATIONS AND TO PROVIDE FOR SAFETY ON THE JOBSITE.

   C. THE OWNER SHALL PROVIDE SPECIAL INSPECTORS TO PROVIDE INSPECTION DURING THE CONSTRUCTION OF THE FOLLOWING STRUCTURAL WORK:

		INSPECTION REQUIRED
(1)	CONCRETE CONSTRUCTION	
	a. INSPECTION OF REINFORCING STEEL	PERIODIC
	b. VERIFYING USE OF REQUIRED DESIGN MIX	PERIODIC
	c. AT THE TIME FRESH CONCRETE IS SAMPLED CONTINUOUS TO FABRICATE SPECIMENS FOR STRENGTH TESTS, PERFORM SLUMP AND AIR CONTENT TESTS, AND DETERMINE THE TEMPERATURE OF THE CONCRETE	CONTINUOUS
	d. INSPECTION OF CONCRETE PLACEMENT FOR PROPER APPLICATION TECHNIQUES	CONTINUOUS
	e. INSPECT FORMWORK FOR SHAPE, LOCATION AND DIMENSIONS OF THE CONCRETE MEMBER BEING FORMED	PERIODIC

   D. OBSERVATION VISITS TO THE SITE BY THE STRUCTURAL AND FOUNDATION ENGINEER SHALL NOT INCLUDE SPECIAL INSPECTION OF THE ABOVE ITEMS, NOR INSPECTION OF ANY SHORING REQUIRED FOR CONSTRUCTION.

REVISION NO.	SYM.	DESCRIPTION	SHT./OF	DATE	APPROVED

RUSS S. MIYAHARA
LICENSED PROFESSIONAL ENGINEER
NO. 9444-S
HAWAII, U.S.A.

THIS WORK WAS PREPARED BY ME OR UNDER MY SUPERVISION.

SIGNATURE — EXPIRATION DATE OF THE LICENSE 4-30-26

STATE OF HAWAII
DEPARTMENT OF LAND AND NATURAL RESOURCES
DIVISION OF BOATING AND OCEAN RECREATION

KIKIALOA SMALL BOAT HARBOR
NEW BOAT RAMP

STRUCTURAL GENERAL NOTES

DESIGNED: SUBMITTED: --
DRAWN: DATE: 5/3/2024
CHECKED: SCALE: AS NOTED
APPROVED: CHIEF ENGINEER DATE
DRAWING NO. S-001

POH-2024-00105, Waimea Bay
Hawaii Department of Land and Natural Resources
- New Boat Ramp at Kikiaola Small Boat Harbor
Drawings dated May 06, 2025
Sheet 17 of 36

MAY 3, 2024

KIKIAOLA SMALL BOAT HARBOR NEW BOAT RAMP

DRAWING NAME: Z:\00 ONGOING\00 JF PROJECTS\23-019 KIKIAOLA BOAT RAMP-HDR\01 CAD\05-03-24C GENNOTES\KIKA-S0001 GENNOTES.DWG PLOT TIME: 05-03-24, 4:04 PM)

STRUCTURAL GENERAL NOTES

7. CONSTRUCTION NOTES:

A. THE CONTRACTOR SHALL VERIFY ALL DIMENSIONS AND SITE CONDITIONS AND SHALL REPORT ANY DISCREPANCIES IN WRITING TO THE OFFICER IN CHARGE BEFORE COMMENCING WORK OR ORDERING MATERIALS.

B. THE CONTRACTOR SHALL VERIFY SITE CONDITIONS AND NOT RELY UPON THESE PLANS FOR EXISTING DIMENSIONS, ELEVATIONS AND AZIMUTHS, STREAM CHANNEL LOCATION, ROADS, ROADWAY GUTTERS, CURBS, AND SIDEWALKS, ETC. CONDITIONS MAY DIFFER FROM THOSE SHOWN.

C. THE CONTRACTOR SHALL BE SOLELY RESPONSIBLE FOR THE PROTECTION OF ADJACENT PROPERTIES, UTILITIES AND EXISTING AND NEW STRUCTURES FROM DAMAGE DUE TO CONSTRUCTION. REPAIRING ANY DAMAGE SHALL BE AT THE CONTRACTOR'S OWN EXPENSE, TO SATISFACTION OF THE OFFICER IN CHARGE.

D. THE CONTRACTOR SHALL VERIFY THE LOCATION OF ALL UTILITY LINES AND NOTIFY THE RESPECTIVE OWNERS BEFORE COMMENCING WITH EXCAVATION, AND ANY TEMPORARY PILING OR SHEETING.

E. EXCEPT AS OTHERWISE NOTED, ALL VERTICAL DIMENSIONS ARE MEASURED PLUMB.

F. FOR CONCRETE FINISH SEE SPECIFICATIONS AND SPECIAL PROVISIONS. CONSTRUCTION JOINTS MAY BE RELOCATED OR ADDITIONAL ONES ADDED SUBJECT TO THE APPROVAL OF THE OFFICER IN CHARGE.

G. UNLESS OTHERWISE NOTED, ALL EXPOSED CONCRETE EDGES SHALL BE CHAMFERED 3/4" X 3/4".

H. THE CONTRACTOR SHALL CONDUCT HIS WORK IN SUCH A MANNER AND PROVIDE SUCH TEMPORARY SHORING OR OTHER MEASURES AS MAY BE NECESSARY TO INSURE THE SAFETY OF ALL CONCERNED AND TO PROTECT EXISTING STRUCTURES.

I. IN THE EVENT OF OVER EXCAVATION, THE SPACE SHALL BE FILLED WITH A MINIMUM OF 1500 PSI CONCRETE AT THE CONTRACTOR'S EXPENSE AT NO COST TO THE STATE.

J. ALL CONNECTIONS OF FLOATING DOCK AND ACCESS RAMP, AND CONSTRUCTION CONDITIONS NOT SPECIFICALLY SHOWN SHALL BE DETAILED BY THE CONTRACTOR AND SHALL BE SUBMITTED TO THE ENGINEER FOR REVIEW. DETAILS SHALL COMPLY WITH THE DRAWINGS AND SPECIFICATIONS, CONFORM TO CURRENT CONSTRUCTION PRACTICES AND MEET ALL REQUIREMENTS OF THE LATEST APPLICABLE BUILDING CODES.

K. SHOP DRAWINGS REQUIRED BY THE SPECIFICATIONS SHALL BE SUBMITTED TO THE ENGINEER FOR REVIEW PRIOR TO FABRICATION OF ANY STRUCTURAL COMPONENTS.

L. THE CONTRACTOR SHALL DETAIL ALL MEMBERS AND CONNECTIONS NOT SHOWN BUT WHICH ARE REQUIRED AND SHALL SUBMIT THEM TO THE ENGINEER FOR REVIEW. COST OF THESE MEMBERS AND CONNECTIONS SHALL BE INCLUDED IN THE CONTRACTOR'S BID PRICE.

M. THE CONTRACT DOCUMENTS ARE COMPLEMENTARY. ANY REQUIREMENT OCCURRING IN ONE DOCUMENT IS AS BINDING AS THOUGH OCCURRING IN ALL. A STRICTER REQUIREMENT PREVAILS OVER ANY LESS STRICT REQUIREMENTS. THE STRICTER REQUIREMENT WILL BE THE REQUIREMENT THAT PROVIDES THE GREATER PRODUCT LIFE, DURABILITY, STRENGTH, AND FUNCTION.

POH-2024-00105, Waimea Bay
Hawaii Department of Land and Natural Resources
- New Boat Ramp at Kikiaola Small Boat Harbor
Drawings dated May 06, 2025
Sheet 18 of 36

REVISION NO.	SYM.	DESCRIPTION	SHT./OF	DATE	APPROVED

RUSS S. MIYAHARA
LICENSED PROFESSIONAL ENGINEER
NO. 9444-S
HAWAII, U.S.A.

THIS WORK WAS PREPARED BY ME OR UNDER MY SUPERVISION.

SIGNATURE — EXPIRATION DATE OF THE LICENSE 4-30-26

STATE OF HAWAII
DEPARTMENT OF LAND AND NATURAL RESOURCES
DIVISION OF BOATING AND OCEAN RECREATION

KIKIALOA SMALL BOAT HARBOR
NEW BOAT RAMP

STRUCTURAL GENERAL NOTES

DESIGNED: SUBMITTED: --
DRAWN: DATE: 5/3/2024
CHECKED: SCALE: AS NOTED
APPROVED: CHIEF ENGINEER DATE
DRAWING NO. S-002

JOB NO. B95CK72A SHEET NO. 17 OF 35 SHEETS

DRAWING NAME: Z:\00 ONGOING\00 JF PROJECTS\23-019 KIKIAOLA BOAT RAMP-HDR\01 CAD\05-03-24 NEW BDR\KIKA-S0001 GENNOTES.DWG PLOT TIME: 05-03-24, 2:34 PM)
MAY 3, 2024
KIKIAOLA SMALL BOAT HARBOR NEW BOAT RAMP

SYMBOLS AND ABBREVIATIONS

&	AND
@	AT
≈	BASELINE
≈	CENTERLINE
~	DIAMETER
≥	GREATER THAN OR EQUAL TO
≤	LESS THAN OR EQUAL TO
#	NUMBER
±	PLUS OR MINUS
AB	ANCHOR BOLT
ABUT.	ABUTMENT
AC	ASPHALTIC CONCRETE
ADD.	ADDITIONAL, ADDED
ALT.	ALTERNATE
APPROX.	APPROXIMATE
AZ.	AZIMUTH
B, BOT., BOTT.	BOTTOM
BAL.	BALANCE
BET.	BETWEEN
BF	BOTH FACES, BACK FACE
BFE	BOTTOM OF FOOTING ELEVATION
BK.	BACK
BLT.	BOLT
BM.	BEAM
BOF	BOTTOM OF FOOTING
BR.	BRIDGE
BRG., BRGS.	BEARING, BEARINGS
BVC	BEGINNING OF VERTICAL CURVE
BW	BOTH WAYS
CANT.	CANTILEVER
CBW	CONCRETE BARRIER WALL
CC	CENTER TO CENTER
CF	CUBIC FEET
CFCW	CONTINUOUS FLASHING COMPOUND WATERPROOFING
CG	CENTER OF GRAVITY
CGS	CENTER TO GRAVITY OF STRANDS
CIP	CAST-IN-PLACE
CJ	CONTROL JOINT
CL.	CLASS
CLR.	CLEARANCE
CLSM	CONTROLLED LOW STRENGTH MATERIAL
CO	CLEAN OUT
COL.	COLUMN
CONC.	CONCRETE
CONN.	CONNECTION
CONST.	CONSTRUCTION
CONST. JT.	CONSTRUCTION JOINT
CONT.	CONTINUOUS
CSL	CROSS HOLE SONIC LOGGIN
CY, CU. YD.	CUBIC YARD
DBL.	DOUBLE
DET.	DETAIL
DI	DRAIN INLET, DUCTILE IRON
DIA.	DIAMETER
DIAPH.	DIAPHRAGM
DIM.	DIMENSION
DIST.	DISTANCE
DN.	DOWN
DO	DITTO
DS	DRILLED SHAFT
DWG., DWGS.	DRAWING, DRAWINGS
DWLS.	DOWELS
E	EAST
(E), EXP.	EXPANSION
EA, EA., EA.	EACH
EF	EACH FACE
EFH	EACH FACE HORIZONTAL
EFV	EACH FACE VERTICAL
EJ	EXPANSION JOINT
EL., ELEV.	ELEVATION
ELEC.	ELECTRICAL
EMH	ELECTRICAL MANHOLE
EMB.	EMBANKMENT
EMBED.	EMBEDDED, EMBEDMENT
EP	EDGE OF PAVEMENT
EPS	EXPANDED POLYSTYRENE
EQ.	EQUAL
EST.	ESTIMATED
EVC	END OF VERTICAL CURVE
EW	EACH WAY
EX., EXIST.	EXISTING
EXC.	EXCAVATION
EXCL.	EXCLUDING
EXT.	EXTERIOR
(F)	FIXED
FA	FORCE ACCOUNT
FB	FLAT BAR
F'C	SPECIFIED STRENGTH OF CONCRETE
F'CI	STRENGTH OF CONCRETE AT TIME OF INITIAL PRESTRESS
FF	FAR FACE. FRONT FACE
FIG.	FIGURE
FIN. GR.	FINISH GRADE
FRP	FIBER REINFORCED PLASTIC
FT.	FEET, FOOT
FTG.	FOOTING
F* FU	MIN. GUARANTEED TENSILE STRENGTH OF GFRP
GA.	GAGE, GAUGE
GALV.	GALVANIZED
GFRP	GLASS FIBER REINFORCED POLYMER
GR.	GRADE
GRD.	GROUND
GRP	GROUTED RUBBLE PAVEMENT
(H)	HINGE
HECO	HAWAIIAN ELECTRIC COMPANY
HORIZ., H	HORIZONTAL
HS	HIGH STRENGTH
HT.	HEIGHT
IB	INBOUND
ID	INSIDE DIAMETER
I.F.	INSIDE FACE
IN.	INCH
INT.	INTERIOR
INV.	INVERT
JT.	JOINT
K	KIPS
KF	KIP FOOT
KLF	KIPS PER LINEAR FOOT
KSF	KIPS PER SQUARE FOOT
KSI	KIPS PER SQUARE INCH
L	LENGTH
LB., LBS., LBS.	POUND, POUNDS
LF, LIN. FT.	LINEAR FEET/FOOT
LONGIT.	LONGITUDINAL
LS	LUMP SUM
LTG. STD.	LIGHTING STANDARD
M	MODIFIED
MAX.	MAXIMUM
MECH.	MECHANICAL
MH	MANHOLE
MIN.	MINIMUM
MISC.	MISCELLANEOUS
MPH	MILES PER HOUR
N	NORTH
NF	NEAR FACE
NIC	NOT IN CONTRACT
NO.	NUMBER
NTS	NOT TO SCALE
OB	OUTBOUND
OC	ON CENTER
OD	OUTSIDE DIAMETER
O.F.	OUTSIDE FACE
OG	OUTSIDE GIRDER, OUTBOUND GIRDER
OPN'G	OPENING
O/S	OFFSET
PB	PULL BOX
P(E)	EFFECTIVE PRESTRESSING FORCE
PC	POINT OF CURVATURE
PCC	PORTLAND CEMENT CONCRETE
PCF	POUNDS PER CUBIC FOOT
PERF.	PERFORATED
PI	POINT OF INTERSECTION OF TANGENTS
PIVC	POINT OF INTERSECTION OF VERTICAL CURVE
PL	PLATE
PLF	POUNDS PER LINEAR FOOT
PP	PRECAST PLANK
PRC	POINT OF REVERSE CURVATURE
PRESTR.	PRESTRESSED
P/S	PRESTRESSED STRANDS
PSF	POUNDS PER SQUARE FOOT
PSI	POUNDS PER SQUARE INCH
PT., PTS.	POINT, POINTS
PT	POINT OF TANGENCY, POST TENSIONED
PVC	POLYVINYL CHLORIDE
Q	FLOW RATE
R, RAD.	RADIUS
RDWY.	ROADWAY
REBAR	REINFORCING BAR
REF.	REFERENCE
REINF.	REINFORCED, REINFORCING, REINFORCEMENT
REQ'D.	REQUIRED
RET.	RETAINING
RF	REAR FACE
R/W, ROW	RIGHT OF WAY
S	SOUTH
SDMH	SEWER DRAIN MANHOLE
SE	SUPER ELEVATION
SECT.	SECTION
SF	SQUARE FEET
SHT.	SHEET
SIM.	SIMILAR
SL.	SLOPE
SPC., SPG.	SPACES, SPACING
SPEC.	SPECIFICATION
SPRD.	SPREAD
SS	STAINLESS STEEL
STA.	STATION
STAGG.	STAGGERED
STD.	STANDARD
STIFF.	STIFFENER
STIRR.	STIRRUP
STL.	STEEL
STR.	STRAIGHT
STRUCT.	STRUCTURE
SY	SQUARE YARD
SYMM.	SYMMETRICAL
T	TOP OR WALL THICKNESS
TAN.	TANGENT
T&B	TOP AND BOTTOM
TEMP.	TEMPORARY
THK.	THICK
TFE	TOP OF FOOTING ELEVATION
TOD	TOP OF DECK
TOF	TOP OF FOOTING
TOT.	TOTAL
TOW	TOP OF WALL ELEVATION
TRANSV.	TRANSVERSE
TS	STRUCTURAL TUBING
TYP.	TYPICAL
UNDERGRD.	UNDERGROUND
UNO	UNLESS NOTED OTHERWISE
V, VERT.	VERTICAL
VAR.	VARIES
VC	VERTICAL CURVE
W	WEST
W/	WITH
W/C	WATER/CEMENT RATIO
WP	WORK POINT, WORKING POINT
WS	WATER SURFACE
WW	WING WALL
YR.	YEAR

REVISION NO.	SYM.	DESCRIPTION	SHT./OF	DATE	APPROVED

RUSS S. MIYAHARA
LICENSED PROFESSIONAL ENGINEER
NO. 9444-S
HAWAII, U.S.A.

THIS WORK WAS PREPARED BY ME OR UNDER MY SUPERVISION.

SIGNATURE — EXPIRATION DATE OF THE LICENSE 4-30-26

STATE OF HAWAII
DEPARTMENT OF LAND AND NATURAL RESOURCES
DIVISION OF BOATING AND OCEAN RECREATION

KIKIALOA SMALL BOAT HARBOR
NEW BOAT RAMP

SYMBOLS AND ABBREVIATIONS

DESIGNED: SUBMITTED: --
DRAWN: DATE: 5/3/2024
CHECKED: SCALE: AS NOTED
APPROVED:
CHIEF ENGINEER DATE
DRAWING NO. S-003

POH-2024-00105, Waimea Bay
Hawaii Department of Land and Natural Resources
- New Boat Ramp at Kikiaola Small Boat Harbor
Drawings dated May 06, 2025
Sheet 19 of 36

DRAWING NAME: Z:\00 ONGOING\00 JF PROJECTS\23-019 KIKIAOLA BOAT RAMP-HDR\01 CAD\05-03-24 NEW BDR\KIKA-S0003 SYMB-ABBREV.DWG PLOT TIME: 05-03-24, 2:34 PM)

MAY 3, 2024

KIKIAOLA SMALL BOAT HARBOR NEW BOAT RAMP

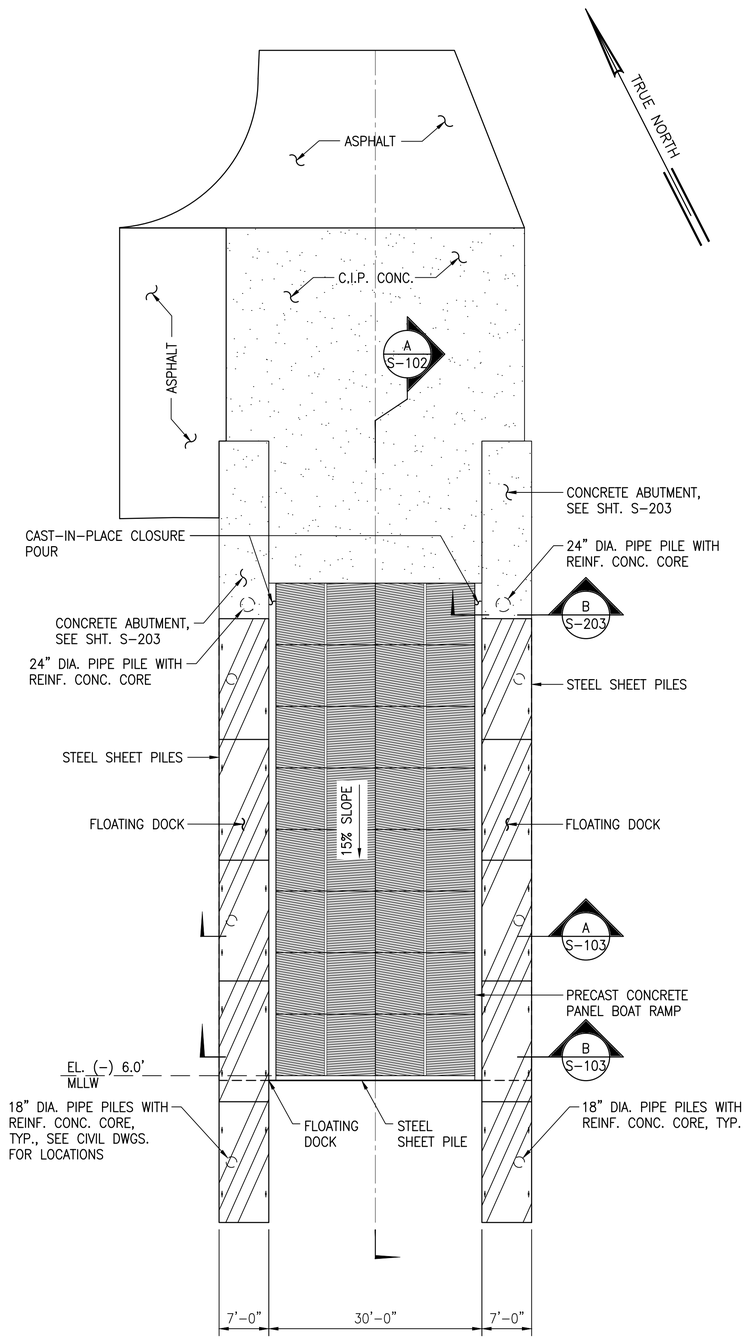

A S-101 BOAT RAMP PLAN
SCALE: 3/32" = 1'-0"

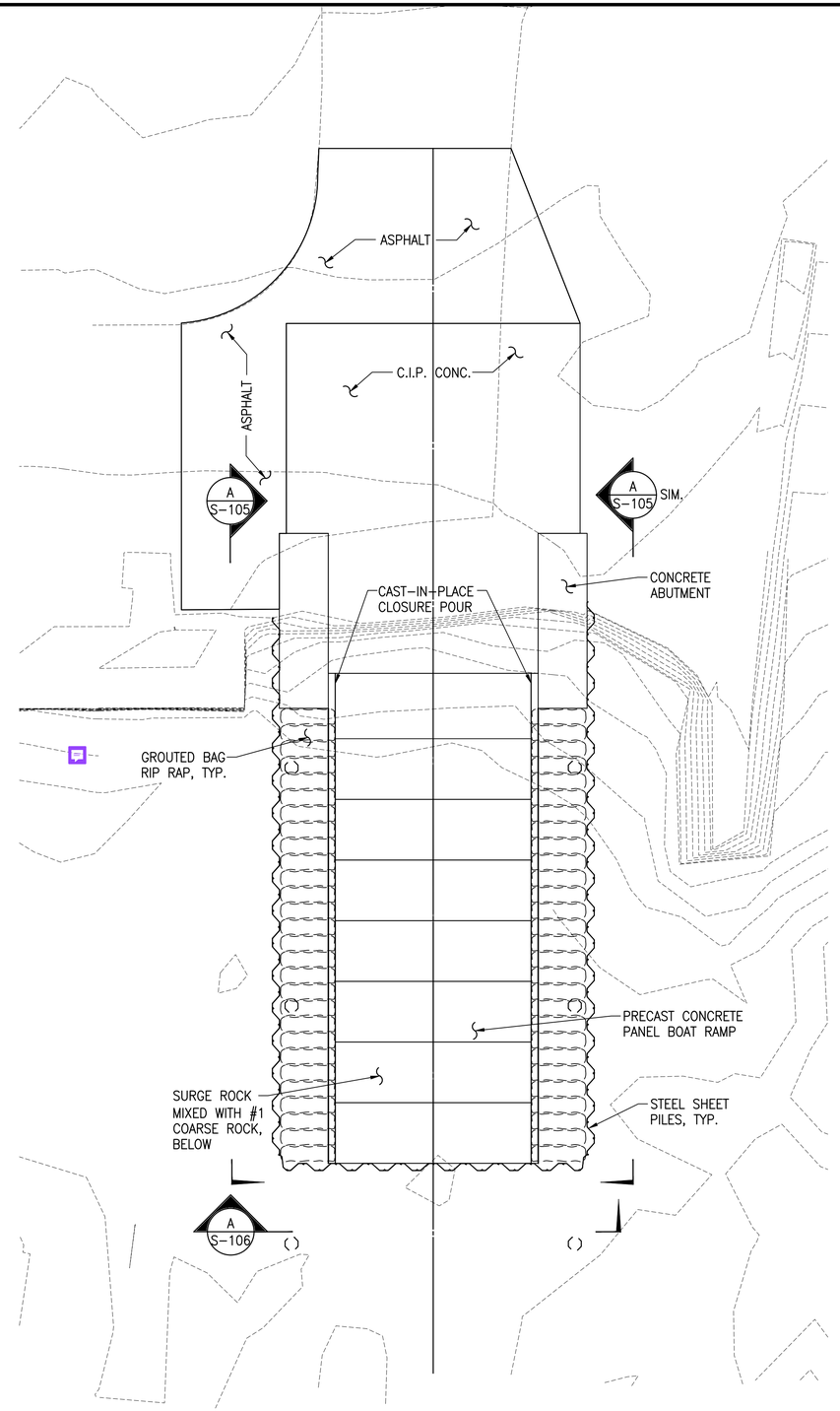

B S-101 SHEET PILE PLAN
SCALE: 3/32" = 1'-0"

POH-2024-00105, Waimea Bay
Hawaii Department of Land and Natural Resources
- New Boat Ramp at Kikiaola Small Boat Harbor
Drawings dated May 06, 2025
Sheet 20 of 36

REVISION NO.	SYM.	DESCRIPTION	SHT./OF	DATE	APPROVED

RUSS S. MIYAHARA
LICENSED PROFESSIONAL ENGINEER
NO. 9444-S
HAWAII, U.S.A.

THIS WORK WAS PREPARED BY ME OR UNDER MY SUPERVISION.

SIGNATURE — EXPIRATION DATE OF THE LICENSE: 4-30-26

STATE OF HAWAII
DEPARTMENT OF LAND AND NATURAL RESOURCES
DIVISION OF BOATING AND OCEAN RECREATION

KIKIALOA SMALL BOAT HARBOR
NEW BOAT RAMP

BOAT RAMP PLAN

DESIGNED:
SUBMITTED: --
DRAWN: JF
DATE: 5/3/2024
CHECKED:
SCALE: AS NOTED
APPROVED:
CHIEF ENGINEER — DATE
DRAWING NO. S-101

DRAWING NAME: Z:\00 ONGOING\00 JF PROJECTS\23-019 KIKIAOLA BOAT RAMP-HDR\01 CAD\05-03-24 NEW BDR\KIKA-S0101 RAMP PLAN.DWG PLOT TIME: 05-03-24, 2:35 PM

MAY 3, 2024

KIKIAOLA SMALL BOAT HARBOR NEW BOAT RAMP

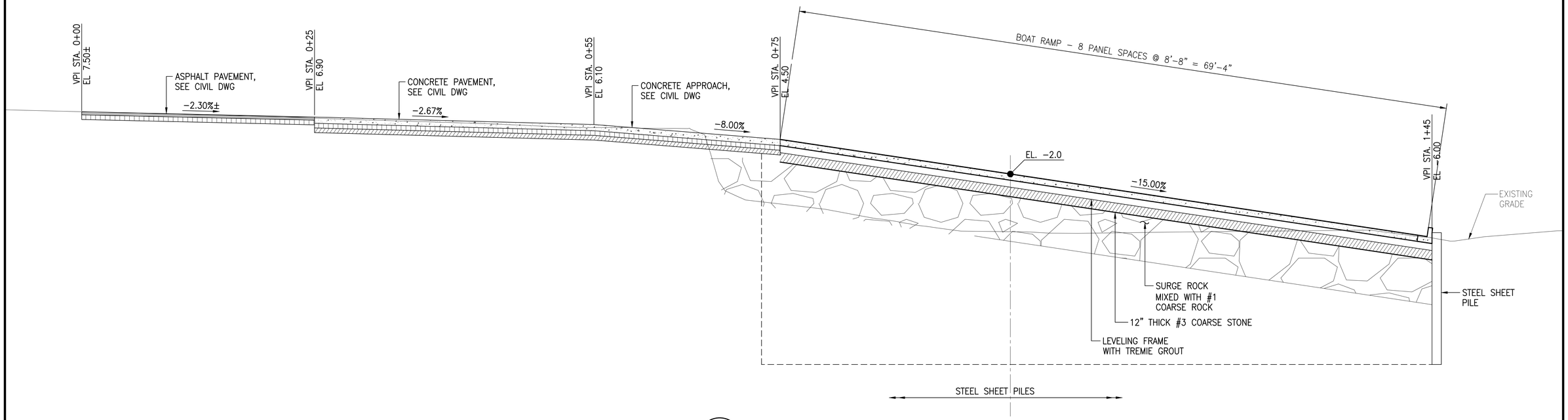

A / S-102 BOAT RAMP SECTION
SCALE: 3/16" = 1'-0"

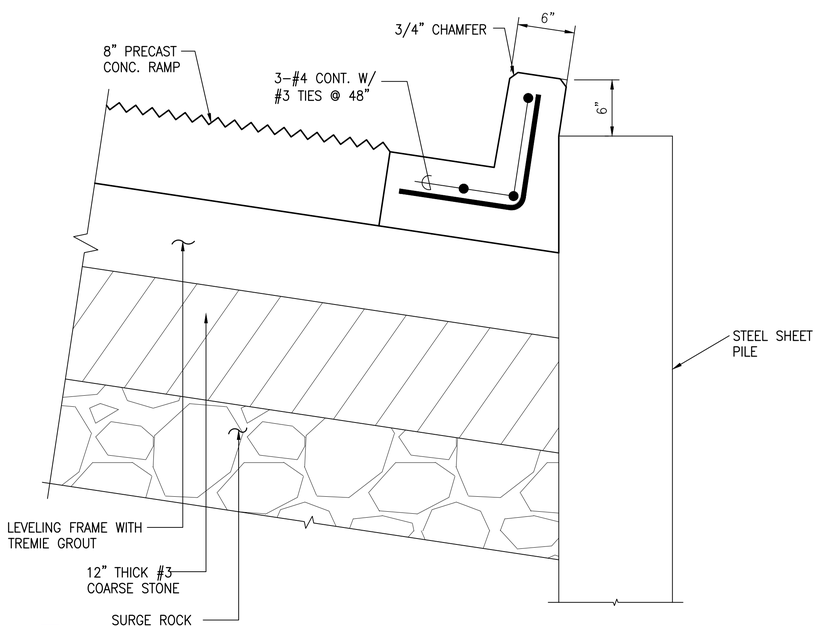

1 / S-102 WHEEL STOP DETAIL
SCALE: 1 1/2" = 1'-0"

POH-2024-00105, Waimea Bay
Hawaii Department of Land and Natural Resources
- New Boat Ramp at Kikiaola Small Boat Harbor
Drawings dated May 06, 2025
Sheet 21 of 36

REVISION NO.	SYM.	DESCRIPTION	SHT./OF	DATE	APPROVED

RUSS S. MIYAHARA
LICENSED PROFESSIONAL ENGINEER
NO. 9444-S
HAWAII, U.S.A.

THIS WORK WAS PREPARED BY ME OR UNDER MY SUPERVISION.

SIGNATURE — EXPIRATION DATE OF THE LICENSE: 4-30-26

STATE OF HAWAII
DEPARTMENT OF LAND AND NATURAL RESOURCES
DIVISION OF BOATING AND OCEAN RECREATION

KIKIALOA SMALL BOAT HARBOR
NEW BOAT RAMP

BOAT RAMP PROFILE

DESIGNED:
SUBMITTED: --
DRAWN: JF
DATE: 5/3/2024
CHECKED:
SCALE: AS NOTED
APPROVED:
CHIEF ENGINEER — DATE
DRAWING NO. S-102

MAY 3, 2024

KIKIAOLA SMALL BOAT HARBOR NEW BOAT RAMP

DRAWING NAME: Z:\00 ONGOING\00 JF PROJECTS\23-019 KIKIAOLA BOAT RAMP-HDR\01 CAD\05-03-24 NEW BDR\KIKA-S0102 RAMP SECT.DWG PLOT TIME: 05-03-24, 2:35 PM

JOB NO. B95CK72A SHEET NO. 20 OF 35 SHEETS

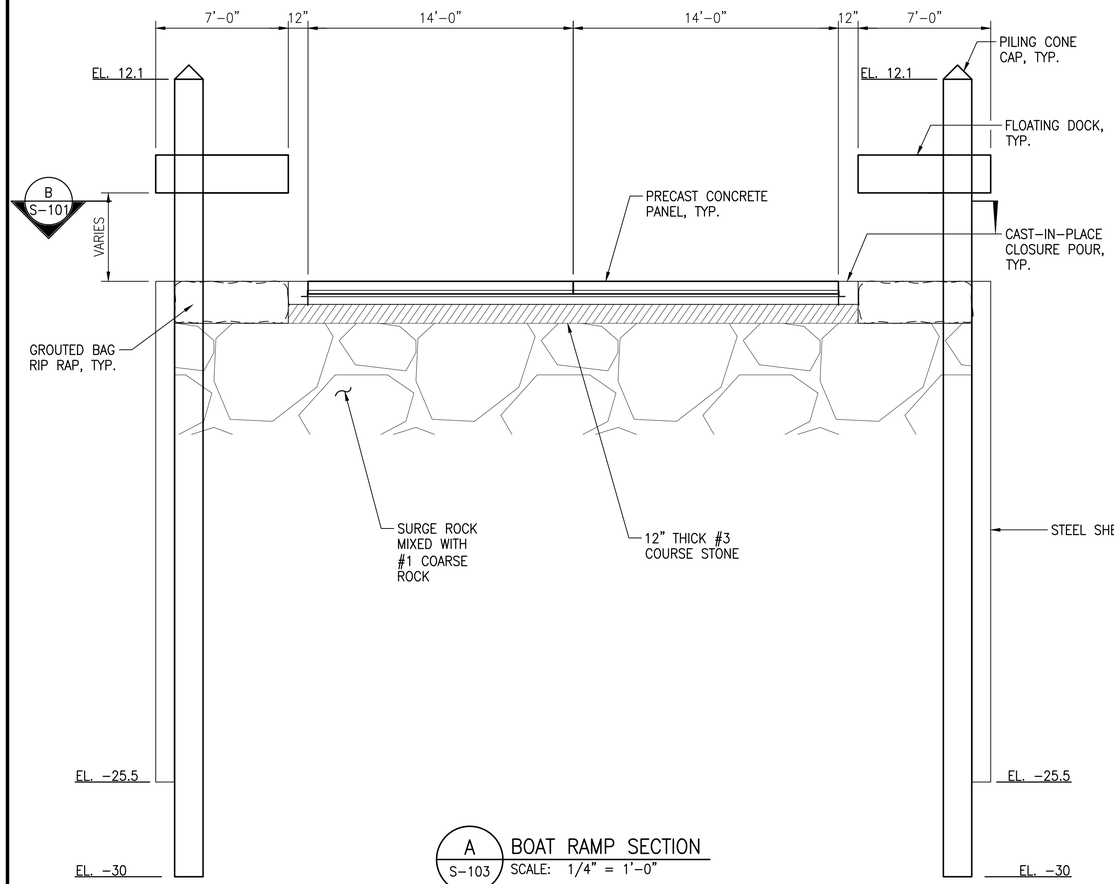

A S-103 BOAT RAMP SECTION
SCALE: 1/4" = 1'-0"

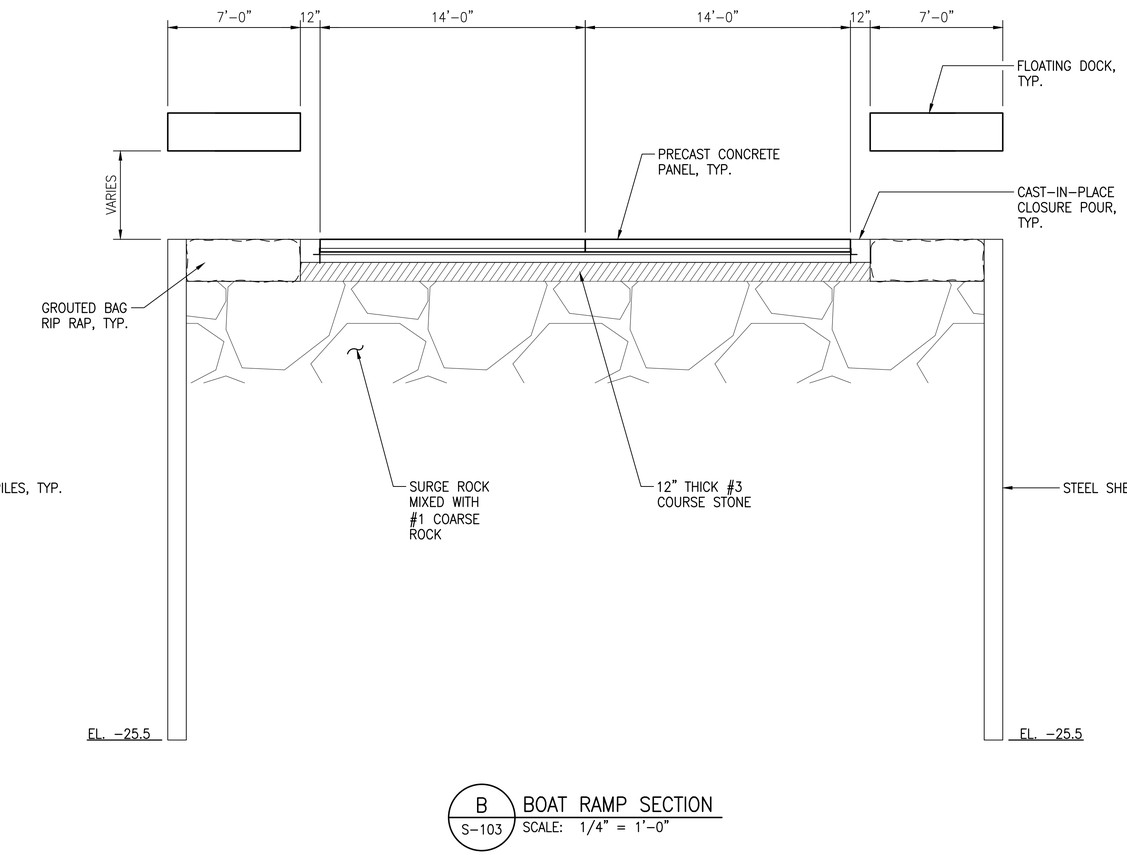

B S-103 BOAT RAMP SECTION
SCALE: 1/4" = 1'-0"

REVISION NO.	SYM.	DESCRIPTION	SHT./OF	DATE	APPROVED

RUSS S. MIYAHARA
LICENSED PROFESSIONAL ENGINEER
NO. 9444-S
HAWAII, U.S.A.

THIS WORK WAS PREPARED BY ME OR UNDER MY SUPERVISION.

SIGNATURE — EXPIRATION DATE OF THE LICENSE 4-30-26

STATE OF HAWAII
DEPARTMENT OF LAND AND NATURAL RESOURCES
DIVISION OF BOATING AND OCEAN RECREATION

KIKIALOA SMALL BOAT HARBOR
NEW BOAT RAMP

BOAT RAMP SECTION

DESIGNED:
SUBMITTED: --
DRAWN: JF
DATE: 5/3/2024
CHECKED:
SCALE: AS NOTED
APPROVED:
CHIEF ENGINEER — DATE
DRAWING NO. S-103

POH-2024-00105, Waimea Bay
Hawaii Department of Land and Natural Resources
- New Boat Ramp at Kikiaola SBH
Drawings dated May 06, 2025
Sheet 9 of 36

DRAWING NAME: Z:\00 ONGOING\00 JF PROJECTS\23-019 KIKIAOLA BOAT RAMP-HDR\01 CAD\05-03-24 NEW BDR\KIKA-S0102 RAMP SECT.DWG PLOT TIME: 05-03-24, 2:35 PM)

MAY 3, 2024

KIKIAOLA SMALL BOAT HARBOR NEW BOAT RAMP

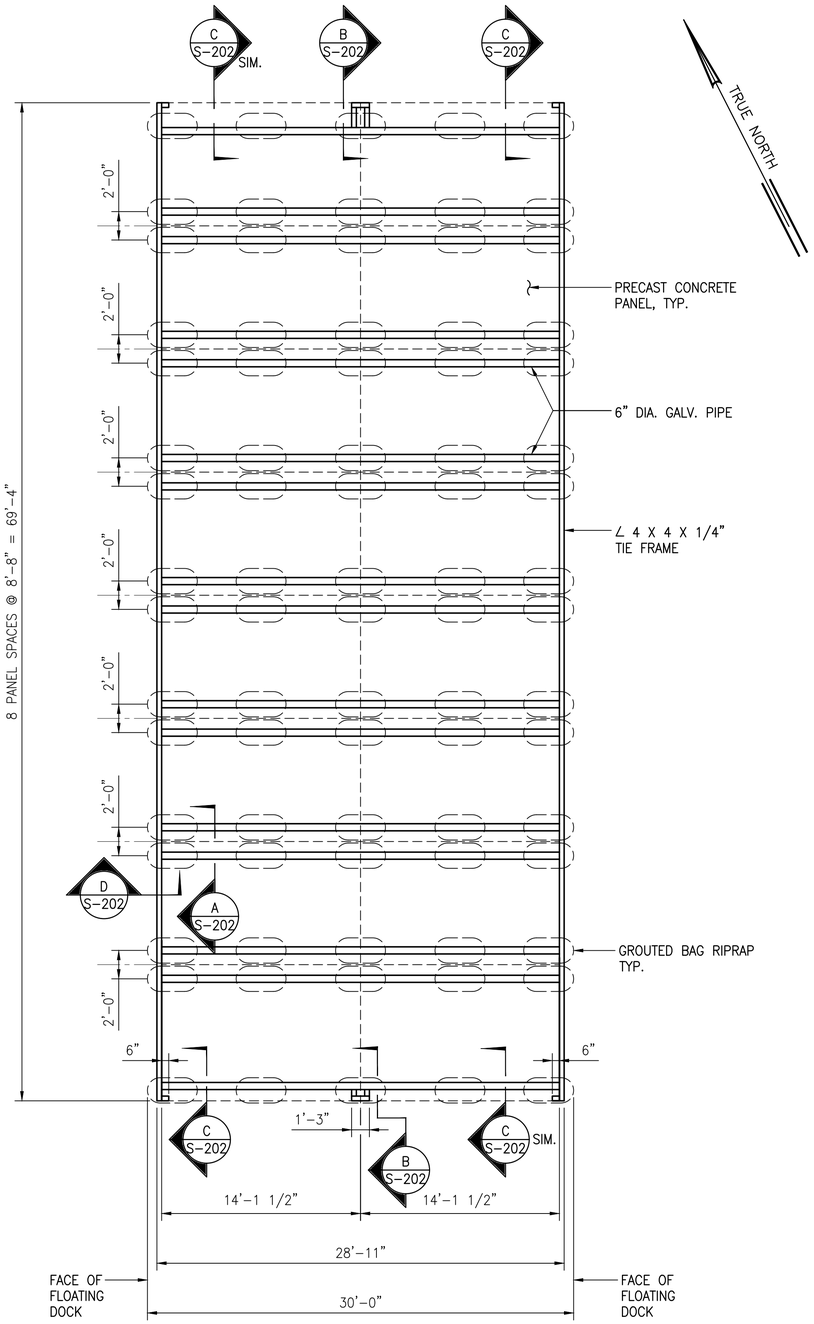

LEVELING FRAME PLAN
SCALE: 3/16" = 1'-0"

POH-2024-00105, Waimea Bay
Hawaii Department of Land and Natural Resources
- New Boat Ramp at Kikiaola Small Boat Harbor
Drawings dated May 06, 2025
Sheet 22 of 36

REVISION NO.	SYM.	DESCRIPTION	SHT./OF	DATE	APPROVED

RUSS S. MIYAHARA
LICENSED PROFESSIONAL ENGINEER
NO. 9444-S
HAWAII, U.S.A.

THIS WORK WAS PREPARED BY ME OR UNDER MY SUPERVISION.

SIGNATURE — EXPIRATION DATE OF THE LICENSE 4-30-26

STATE OF HAWAII
DEPARTMENT OF LAND AND NATURAL RESOURCES
DIVISION OF BOATING AND OCEAN RECREATION

KIKIALOA SMALL BOAT HARBOR
NEW BOAT RAMP

LEVELING FRAME PLAN

DESIGNED:	SUBMITTED: --
DRAWN: JF	DATE: 5/3/2024
CHECKED:	SCALE: AS NOTED
APPROVED:	DRAWING NO. S-104
CHIEF ENGINEER	DATE

JOB NO. B95CK72A SHEET NO. 22 OF 35 SHEETS

DRAWING NAME: Z:\00 ONGOING\00 JF PROJECTS\23-019 KIKIAOLA BOAT RAMP-HDR\01 CAD\05-03-24 NEW BDR\KIKA-S0104.DWG PLOT TIME: 05-03-24, 2:36 PM)

MAY 3, 2024

KIKIAOLA SMALL BOAT HARBOR NEW BOAT RAMP

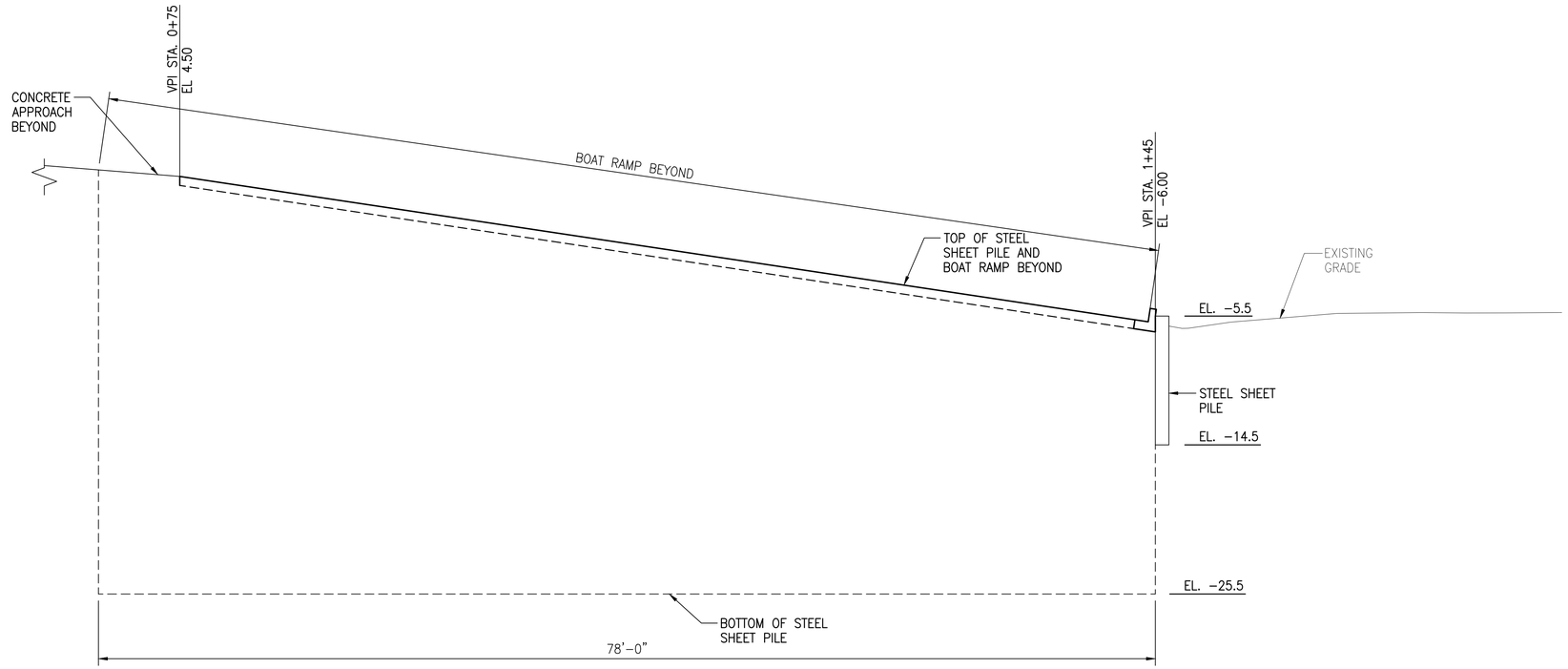

A / S-105 SHEET PILE ELEVATION
SCALE: 3/16" = 1'-0"

REVISION NO.	SYM.	DESCRIPTION	SHT./OF	DATE	APPROVED

LICENSED PROFESSIONAL ENGINEER
RUSS S. MIYAHARA
NO. 9444-S
HAWAII, U.S.A.

THIS WORK WAS PREPARED BY ME OR UNDER MY SUPERVISION.

SIGNATURE — EXPIRATION DATE OF THE LICENSE 4-30-26

STATE OF HAWAII
DEPARTMENT OF LAND AND NATURAL RESOURCES
DIVISION OF BOATING AND OCEAN RECREATION

KIKIALOA SMALL BOAT HARBOR
NEW BOAT RAMP

SHEET PILE ELEVATION

DESIGNED:	SUBMITTED: --
DRAWN: JF	DATE: 5/3/2024
CHECKED:	SCALE: AS NOTED
APPROVED:	DRAWING NO. S-105
CHIEF ENGINEER	DATE

POH-2024-00105, Waimea Bay
Hawaii Department of Land and Natural Resources
- New Boat Ramp at Kikiaola Small Boat Harbor
Drawings dated May 06, 2025
Sheet 24 of 36

MAY 3, 2024

KIKIAOLA SMALL BOAT HARBOR NEW BOAT RAMP

DRAWING NAME: Z:\00 ONGOING\00 JF PROJECTS\23-019 KIKIAOLA BOAT RAMP-HDR\01 CAD\05-03-24 NEW BDR\KIKA-S0105 RAMP SECT.DWG PLOT TIME: 05-03-24, 2:36 PM)

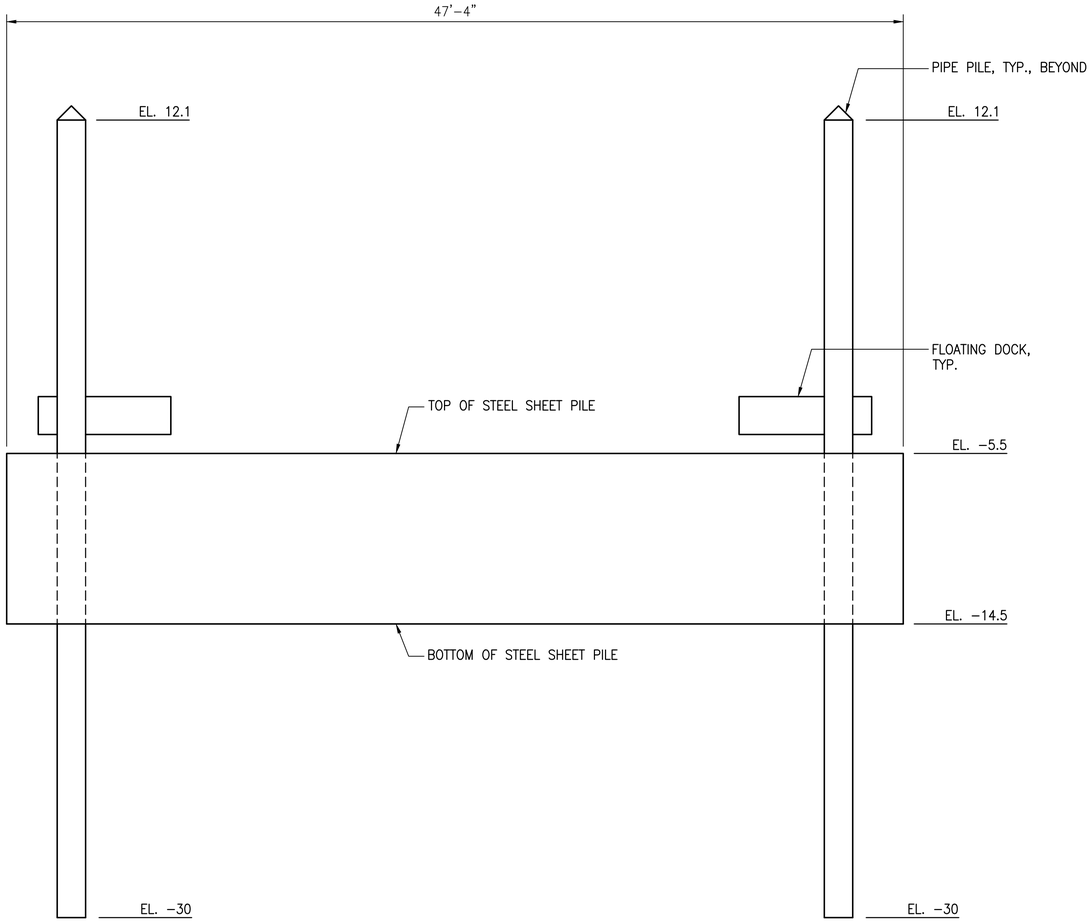

A / S-106 SHEET PILE ELEVATION
SCALE: 1/4" = 1'-0"

REVISION NO.	SYM.	DESCRIPTION	SHT./OF	DATE	APPROVED

RUSS S. MIYAHARA
LICENSED PROFESSIONAL ENGINEER
NO. 9444-S
HAWAII, U.S.A.

THIS WORK WAS PREPARED BY ME OR UNDER MY SUPERVISION.

SIGNATURE — EXPIRATION DATE OF THE LICENSE 4-30-26

STATE OF HAWAII
DEPARTMENT OF LAND AND NATURAL RESOURCES
DIVISION OF BOATING AND OCEAN RECREATION

KIKIALOA SMALL BOAT HARBOR
NEW BOAT RAMP

SHEET PILE ELEVATION

DESIGNED:
SUBMITTED: --
DRAWN: JF
DATE: 5/3/2024
CHECKED:
SCALE: AS NOTED
APPROVED:
CHIEF ENGINEER — DATE
DRAWING NO. S-106

POH-2024-00105, Waimea Bay
Hawaii Department of Land and Natural Resources
- New Boat Ramp at Kikiaola Small Boat Harbor
Drawings dated May 06, 2025
Sheet 25 of 36

DRAWING NAME: Z:\00 ONGOING\00 JF PROJECTS\23-019 KIKIAOLA BOAT RAMP-HDR\01 CAD\05-03-24 NEW BDR\KIKA-S0105 RAMP SECT.DWG PLOT TIME: 05-03-24, 2:36 PM)

MAY 3, 2024

KIKIAOLA SMALL BOAT HARBOR NEW BOAT RAMP

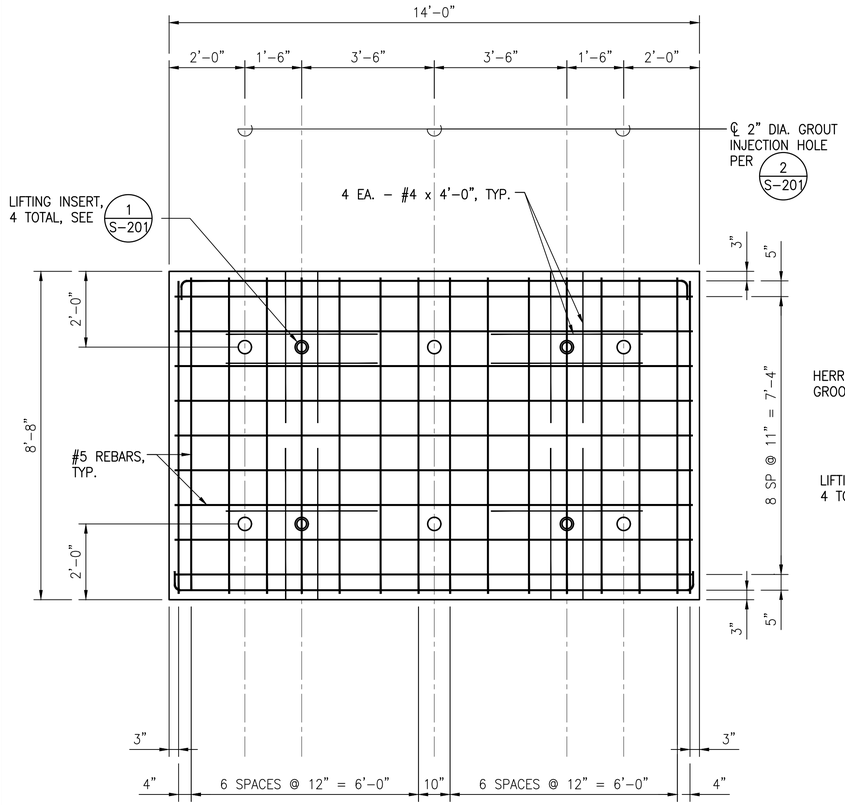

REINFORCING PLAN

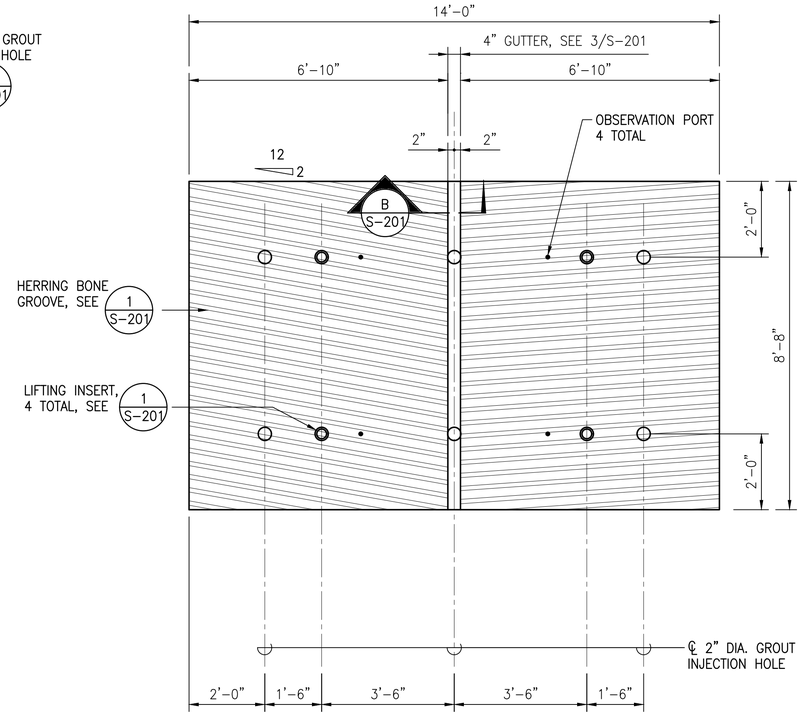

GROOVE PLAN

A S-201 PRECAST CONCRETE PANEL DETAIL
SCALE: 1/2" = 1'-0"

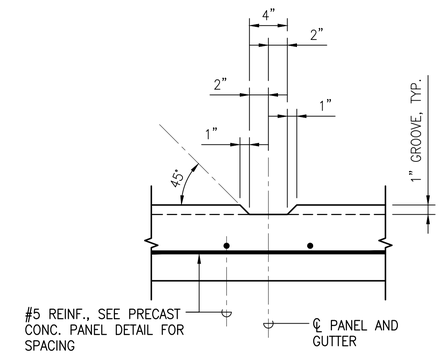

B S-201 GUTTER DETAIL
SCALE: 1 1/2" = 1'-0"

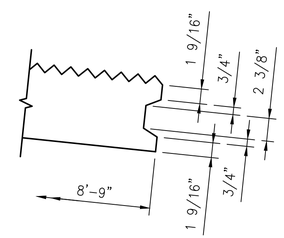

CONDITION AT BREAK

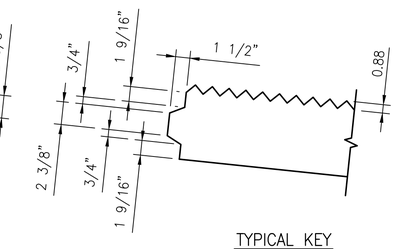

TYPICAL KEY

3 S-201 TYPICAL KEY DETAIL
SCALE: 1 1/2" = 1'-0"

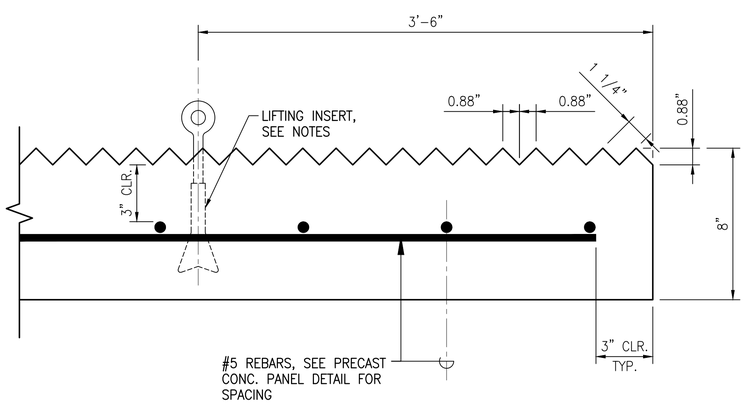

1 S-201 LIFTING INSERT AND GROOVE DETAIL
SCALE: 3" = 1'-0"

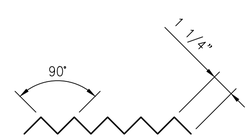

V-GROOVE DETAIL

NOTES:

1. THE CONTRACTOR SHALL DETERMINE SIZE AND EMBEDMENT.
2. REMOVE INSERTS AFTER GROUTING BELOW PRECAST SLAB. FILL ALL HOLES WITH POLYMER-MODIFIED CEMENTITIOUS REPAIR MORTAR.

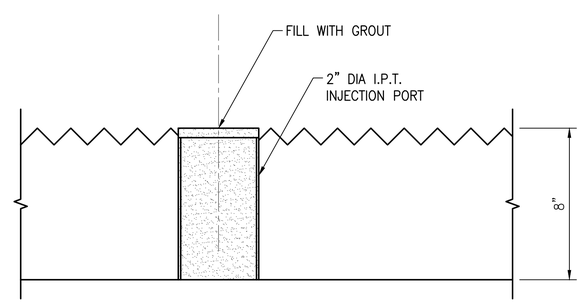

2 S-201 INJECTION PORT HOLE
SCALE: 3" = 1'-0"

POH-2024-00105, Waimea Bay
Hawaii Department of Land and Natural Resources
- New Boat Ramp at Kikiaola Small Boat Harbor
Drawings dated May 06, 2025
Sheet 26 of 36

REVISION NO.	SYM.	DESCRIPTION	SHT./OF	DATE	APPROVED

RUSS S. MIYAHARA LICENSED PROFESSIONAL ENGINEER NO. 9444-S HAWAII, U.S.A.

THIS WORK WAS PREPARED BY ME OR UNDER MY SUPERVISION.

SIGNATURE — EXPIRATION DATE OF THE LICENSE 4-30-26

STATE OF HAWAII
DEPARTMENT OF LAND AND NATURAL RESOURCES
DIVISION OF BOATING AND OCEAN RECREATION

KIKIALOA SMALL BOAT HARBOR
NEW BOAT RAMP

CAST-IN-PLACE DETAIL

DESIGNED:
SUBMITTED: --
DRAWN: JF
DATE: 5/3/2024
CHECKED:
SCALE: AS NOTED
APPROVED:
CHIEF ENGINEER — DATE
DRAWING NO. S-201

MAY 3, 2024

KIKIAOLA SMALL BOAT HARBOR NEW BOAT RAMP

DRAWING NAME: Z:\00 ONGOING\00 JF PROJECTS\23-019 KIKIAOLA BOAT RAMP-HDR\01 CAD\05-03-24 NEW BDR\KIKA-S0201.DWG PLOT TIME: 05-03-24, 2:37 PM)

JOB NO. B95CK72A SHEET NO. 25 OF 35 SHEETS

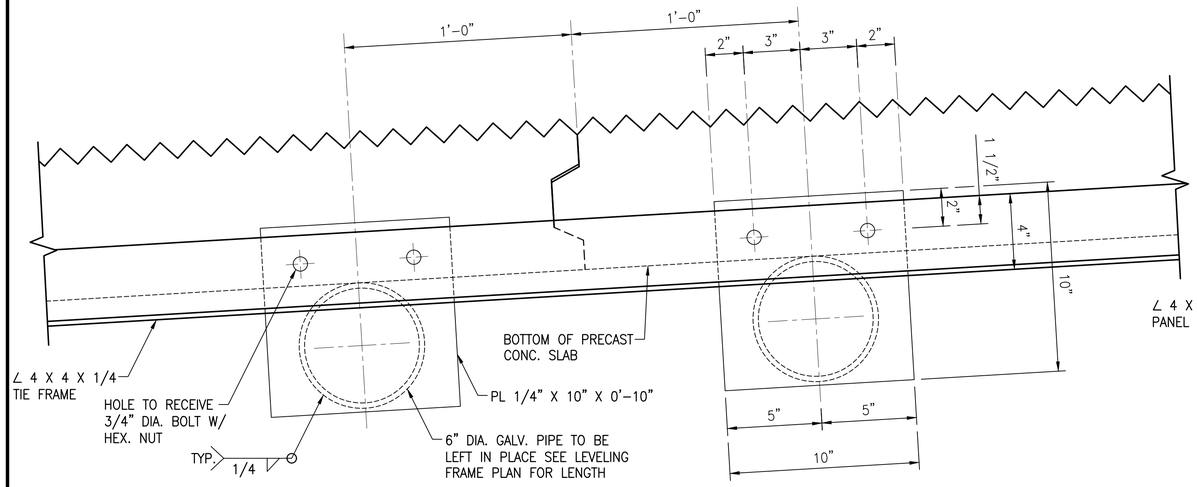

AT STRAIGHT BREAK

A / S-202 PIPE FRAME DETAIL
SCALE: 3" = 1'-0"

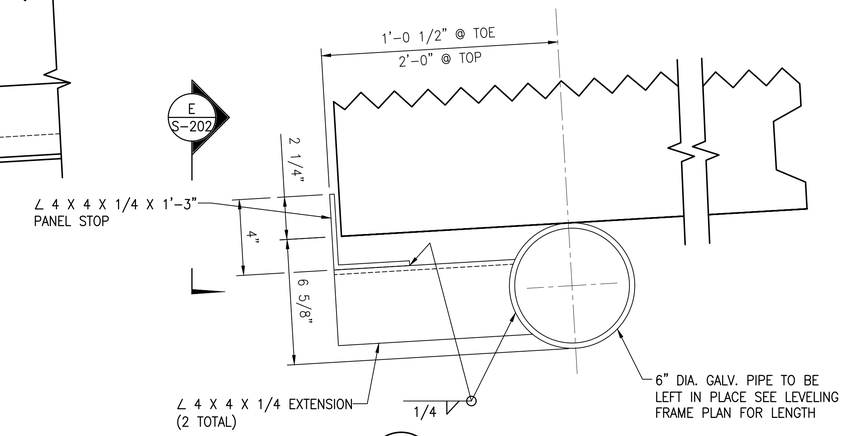

B / S-202 PIPE FRAME AT ENDS OF RAMP
SCALE: 3" = 1'-0"

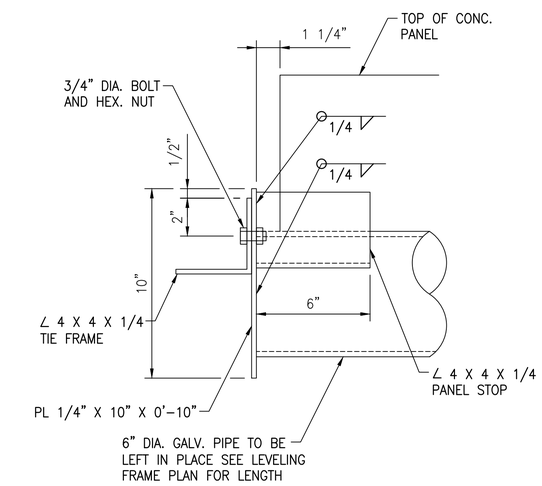

F / S-202 ANGLE FRAME TIE
SCALE: 3" = 1'-0"

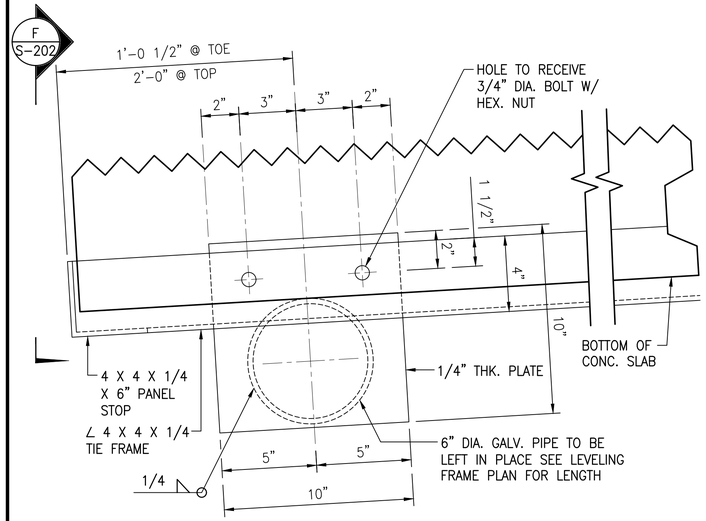

C / S-202 PIPE FRAME AT ENDS OF RAMP
SCALE: 3" = 1'-0"

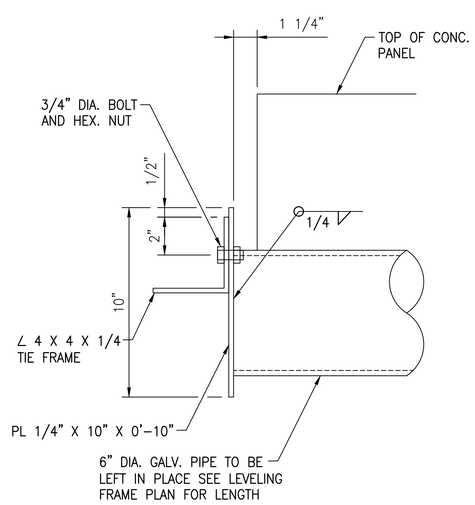

D / S-202 ANGLE FRAME TIE
SCALE: 3" = 1'-0"

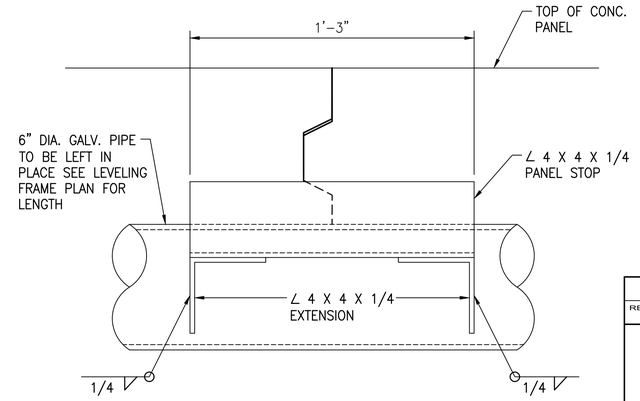

E / S-202 SECTION OF PIPE FRAME AT TOE OF RAMP
SCALE: 3" = 1'-0"

REVISION NO.	SYM.	DESCRIPTION	SHT./OF	DATE	APPROVED

RUSS S. MIYAHARA
LICENSED PROFESSIONAL ENGINEER
NO. 9444-S
HAWAII, U.S.A.

THIS WORK WAS PREPARED BY ME OR UNDER MY SUPERVISION.

SIGNATURE — EXPIRATION DATE OF THE LICENSE 4-30-26

STATE OF HAWAII
DEPARTMENT OF LAND AND NATURAL RESOURCES
DIVISION OF BOATING AND OCEAN RECREATION

KIKIALOA SMALL BOAT HARBOR
NEW BOAT RAMP

LEVELING FRAME SHEET PILE & CONC. DETAILS

DESIGNED:	SUBMITTED: --
DRAWN: JF	DATE: 5/3/2024
CHECKED:	SCALE: AS NOTED
APPROVED:	DRAWING NO. S-202
CHIEF ENGINEER / DATE	

POH-2024-00105, Waimea Bay
Hawaii Department of Land and Natural Resources
- New Boat Ramp at Kikiaola Small Boat Harbor
Drawings dated May 06, 2025, Sheet 27 of 36

JOB NO. B95CK72A SHEET NO. 26 OF 35 SHEETS

MAY 3, 2024

KIKIAOLA SMALL BOAT HARBOR NEW BOAT RAMP

DRAWING NAME: Z:\00 ONGOING\00 JF PROJECTS\23-019 KIKIAOLA BOAT RAMP-HDR\01 CAD\05-03-24 NEW BDR\KIKA-S0202.DWG PLOT TIME: 05-03-24, 2:37 PM)

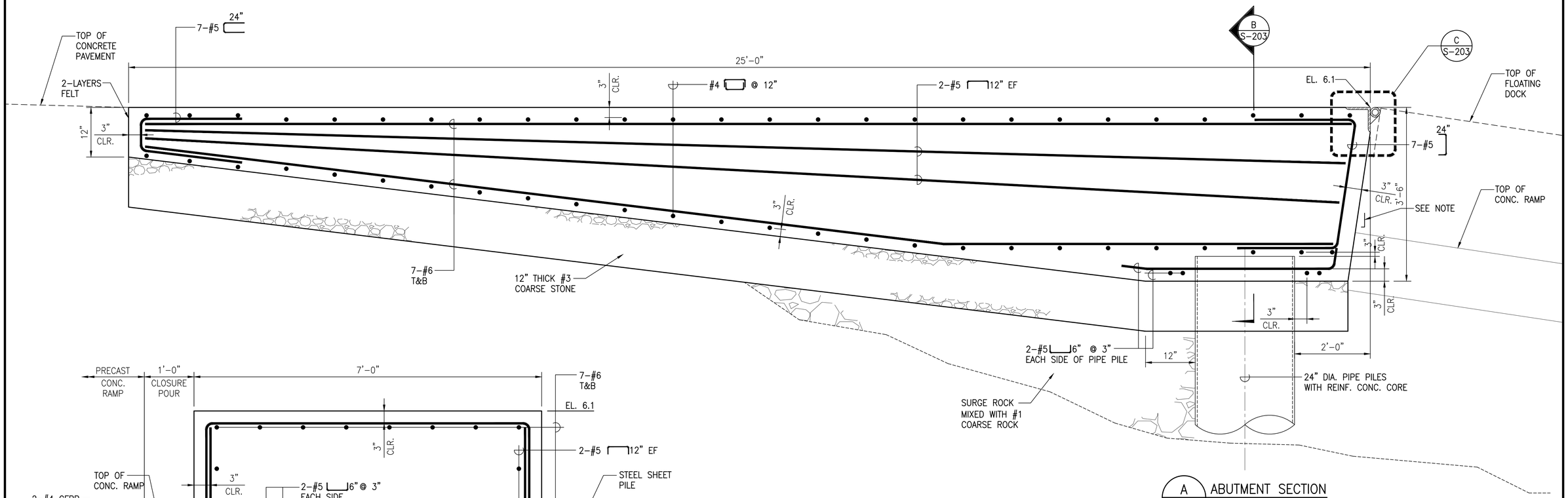

A S-203 ABUTMENT SECTION
SCALE: 1" = 1'-0"

NOTE:

SLOPE TO BE DETERMINED BY FLOATING DOCK MANUFACTURER AND APPROVED BY ENGINEER.

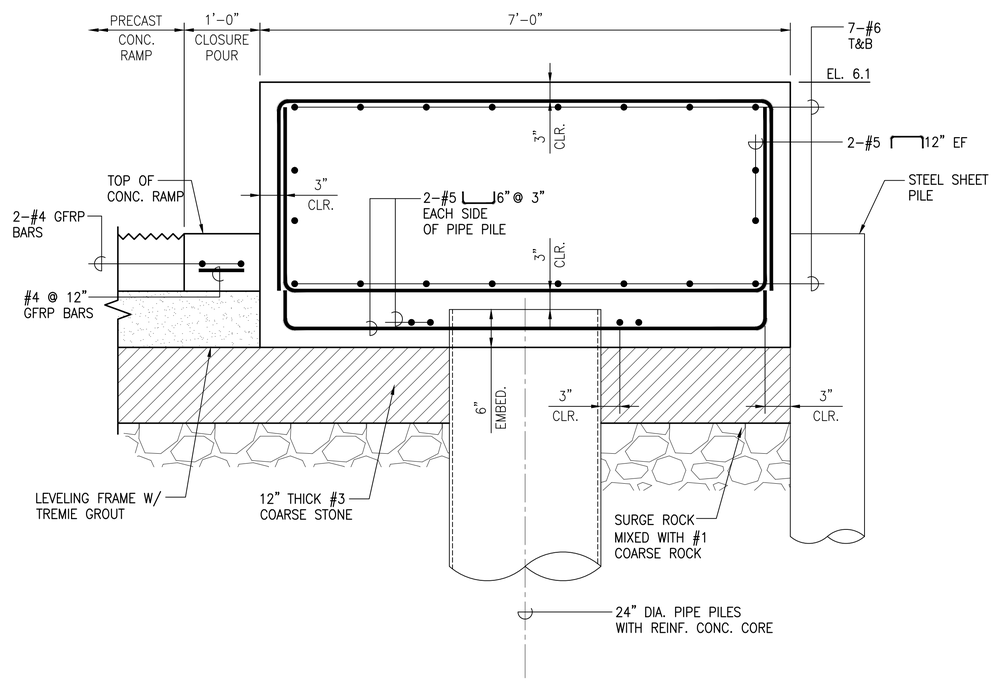

B S-203 ABUTMENT SECTION
SCALE: 1" = 1'-0"

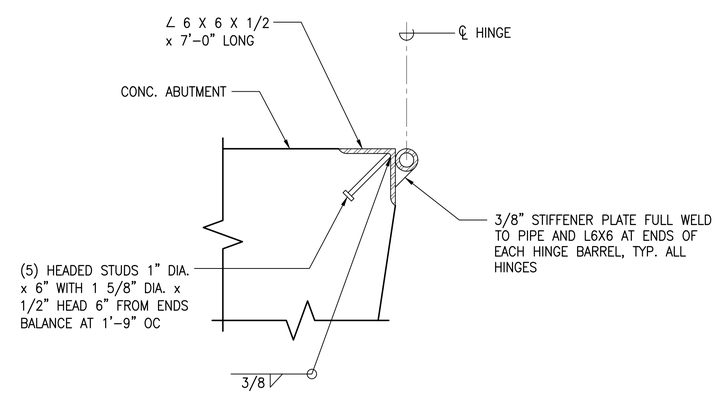

C S-203 HINGE DETAIL
SCALE: 1 1/2" = 1'-0"

NOTE:

HINGE PRODUCT TO BE DETERMINED BY FLOATING DOCK MANUFACTURER AND APPROVED BY ENGINEER.

REVISION NO.	SYM.	DESCRIPTION	SHT./OF	DATE	APPROVED

RUSS S. MIYAHARA LICENSED PROFESSIONAL ENGINEER NO. 9444-S HAWAII, U.S.A.

THIS WORK WAS PREPARED BY ME OR UNDER MY SUPERVISION.

SIGNATURE — EXPIRATION DATE OF THE LICENSE 4-30-26

STATE OF HAWAII
DEPARTMENT OF LAND AND NATURAL RESOURCES
DIVISION OF BOATING AND OCEAN RECREATION

KIKIALOA SMALL BOAT HARBOR
NEW BOAT RAMP

ABUTMENT SECTION

DESIGNED: | SUBMITTED: --
DRAWN: JF | DATE: 5/3/2024
CHECKED: | SCALE: AS NOTED
APPROVED:
CHIEF ENGINEER — DATE
DRAWING NO. S-203

POH-2024-00105, Waimea Bay
Hawaii Department of Land and Natural Resources
- New Boat Ramp at Kikiaola Small Boat Harbor
Drawings dated May 06, 2025
Sheet 28 of 36

MAY 3, 2024

KIKIAOLA SMALL BOAT HARBOR NEW BOAT RAMP

DRAWING NAME: Z:\00 ONGOING\00 JF PROJECTS\23-019 KIKIAOLA BOAT RAMP-HDR\01 CAD\05-03-24 NEW BDR\KIKA-S0203 DOCK SECT.DWG PLOT TIME: 05-03-24, 2:37 PM)

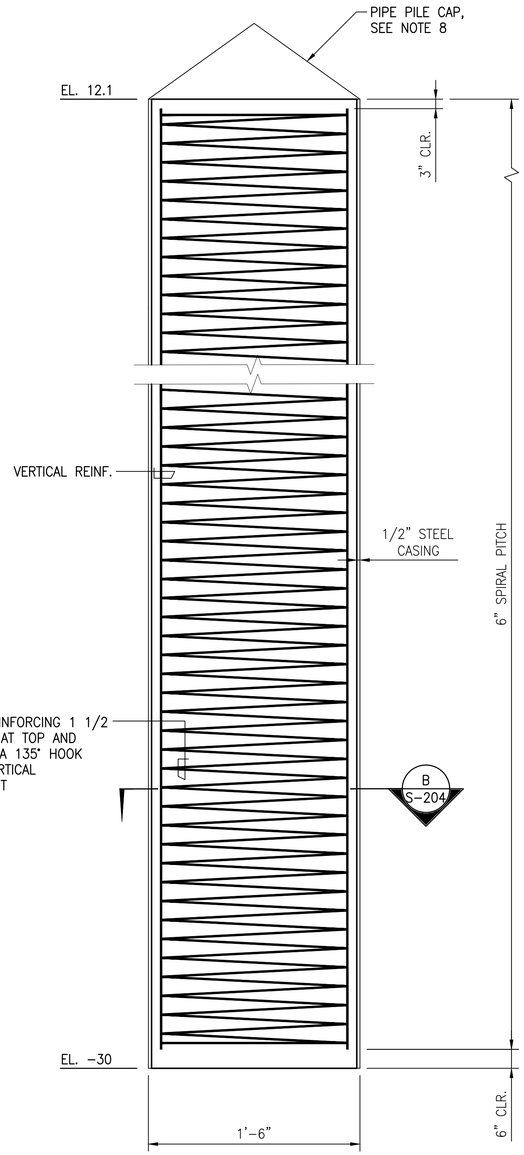

A S-204 TYPICAL PIPE PILE ELEVATION
SCALE: NOT TO SCALE

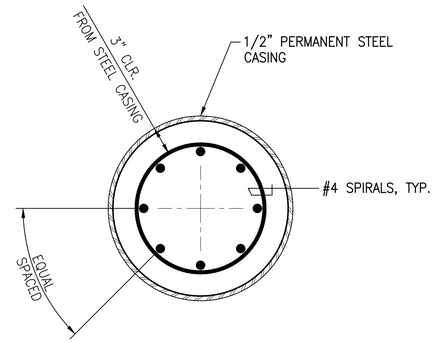

1% REINFORCING
8 – #5

B S-204 SECTION
SCALE: 1 1/2" = 1'-0"

NOTES:

1. LAP SPLICE LENGTH FOR #5 VERT. BAR SHALL BE 3'-0".
2. LAPPED SPLICES SHALL BE STAGGERED WITH A MINIMUM OF 2'-0" VERTICALLY BETWEEN SPLICE POINTS.
3. STAGGERED SPLICE POINTS FOR LONGITUDINAL REINFORCING SHALL NOT BE MORE THAN 50% OF THE TOTAL AT ANY SECTION NORMAL TO THE AXIS OF THE SHAFT.
4. LAP SPLICE LENGTH FOR #4 SPIRALS SHALL BE 2'-6" MIN. WITH A 135° HOOK BEND AT EACH END.
5. EACH END OF THE SPIRAL SHALL HAVE 1 1/2 EXTRA TURNS WITH A 135° HOOK AROUND A VERTICAL REINFORCING BAR.
6. CONCRETE OR OTHER NON-CORROSIVE SPACING DEVICES SHALL BE USED TO MAINTAIN THE REINFORCEMENT CAGE IN POSITION WITHIN THE SHAFT.
7. VERTICAL SHAFT REINFORCING SHALL BE ARRANGED WITH A TEMPLATE TO AVOID INTERFERENCE WITH HORIZONTAL REINFORCING IN THE ABUTMENT.
8. THE CONTRACTOR SHALL SUBMIT PIPE PILE CAP PRODUCT FOR APPROVAL BY THE ENGINEER.

REVISION NO.	SYM.	DESCRIPTION	SHT./OF	DATE	APPROVED

RUSS S. MIYAHARA
LICENSED PROFESSIONAL ENGINEER
NO. 9444-S
HAWAII, U.S.A.

THIS WORK WAS PREPARED BY ME OR UNDER MY SUPERVISION.

SIGNATURE — EXPIRATION DATE OF THE LICENSE 4-30-26

STATE OF HAWAII
DEPARTMENT OF LAND AND NATURAL RESOURCES
DIVISION OF BOATING AND OCEAN RECREATION

KIKIALOA SMALL BOAT HARBOR
NEW BOAT RAMP

PIPE PILE AT LOADING DOCK DETAILS

DESIGNED: | SUBMITTED: --
DRAWN: JF | DATE: 5/3/2024
CHECKED: | SCALE: AS NOTED
APPROVED:
CHIEF ENGINEER — DATE

DRAWING NO. S-204

POH-2024-00105, Waimea Bay
Hawaii Department of Land and Natural Resources
- New Boat Ramp at Kikiaola Small Boat Harbor
Drawings dated May 06, 2025
Sheet 29 of 36

DRAWING NAME: Z:\00 ONGOING\00 JF PROJECTS\23-019 KIKIAOLA BOAT RAMP-HDR\01 CAD\05-03-24 NEW BDR\KIKA-S0204.DWG PLOT TIME: 05-03-24, 2:38 PM)

MAY 3, 2024

KIKIAOLA SMALL BOAT HARBOR NEW BOAT RAMP

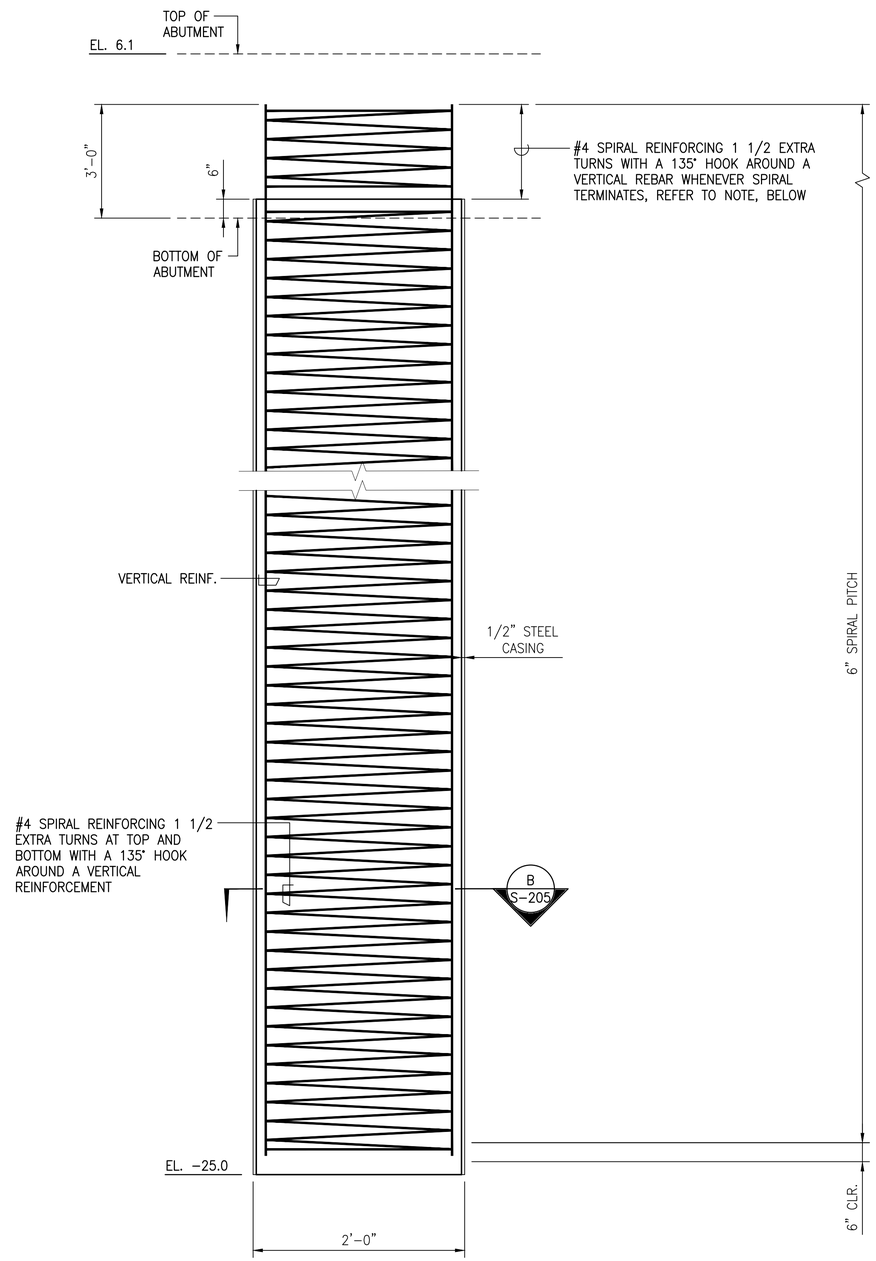

A S-205 TYPICAL PIPE PILE ELEVATION
SCALE: NOT TO SCALE

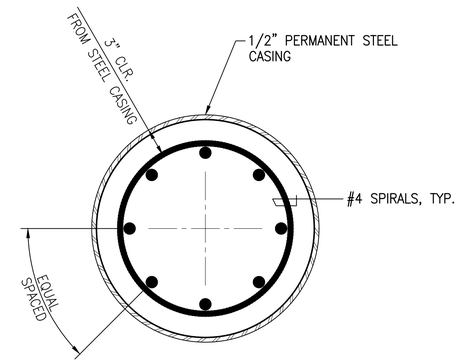

1% REINFORCING
8 - #7

B S-205 SECTION
SCALE: 1 1/2" = 1'-0"

NOTES:

1. LAP SPLICE FOR #7 VERT. BAR SHALL BE 4'-2".
2. SEE S-204 FOR ADDITIONAL PIPE PILE CONCRETE INFILL NOTES.

REVISION NO.	SYM.	DESCRIPTION	SHT./OF	DATE	APPROVED

RUSS S. MIYAHARA LICENSED PROFESSIONAL ENGINEER NO. 9444-S HAWAII, U.S.A.

THIS WORK WAS PREPARED BY ME OR UNDER MY SUPERVISION.

SIGNATURE — EXPIRATION DATE OF THE LICENSE 4-30-26

STATE OF HAWAII
DEPARTMENT OF LAND AND NATURAL RESOURCES
DIVISION OF BOATING AND OCEAN RECREATION

KIKIALOA SMALL BOAT HARBOR
NEW BOAT RAMP

PIPE PILE AT ABUTMENT DETAILS

DESIGNED: | SUBMITTED: --
DRAWN: JF | DATE: 5/3/2024
CHECKED: | SCALE: AS NOTED
APPROVED: | DRAWING NO. S-205
CHIEF ENGINEER | DATE

POH-2024-00105, Waimea Bay
Hawaii Department of Land and Natural Resources
- New Boat Ramp at Kikiaola Small Boat Harbor
Drawings dated May 06, 2025
Sheet 30 of 36

DRAWING NAME: Z:\00 ONGOING\00 JF PROJECTS\23-019 KIKIAOLA BOAT RAMP-HDR\01 CAD\05-03-24 NEW BDR\KIKA-S0204.DWG PLOT TIME: 05-03-24, 2:38 PM)

MAY 3, 2024

KIKIAOLA SMALL BOAT HARBOR NEW BOAT RAMP

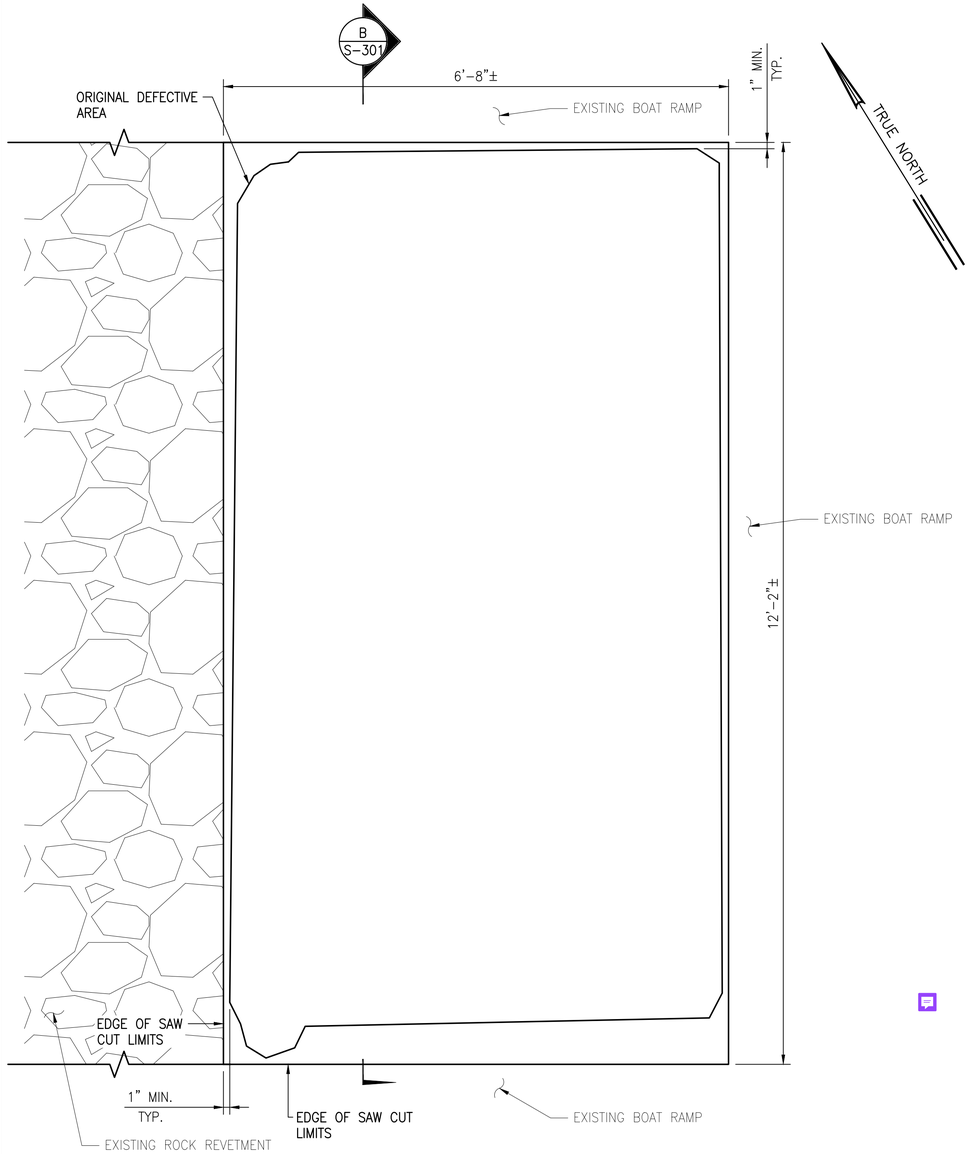

A S-301 PLAN
SCALE: 1" = 1'-0"

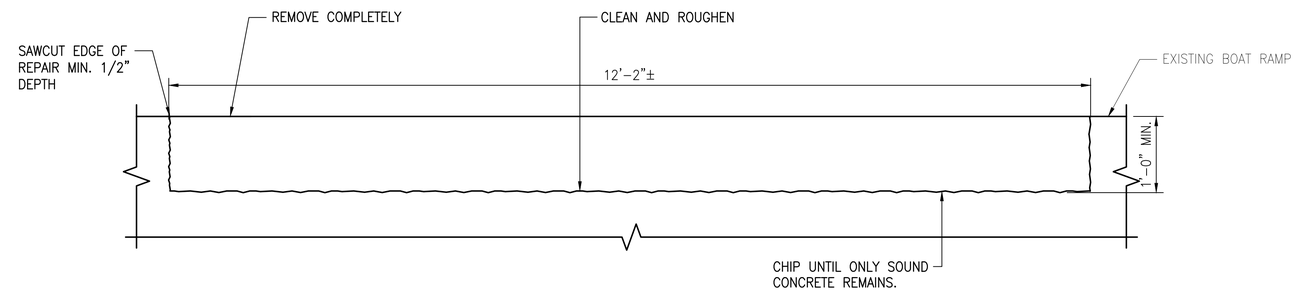

B S-301 SECTION
SCALE: 1" = 1'-0"

NOTES:

1. ANY EXISTING DEFECTIVE CONCRETE AND CRACKED CONCRETE THAT THE CONTRACTOR DISCOVERS THROUGHOUT THE CONSTRUCTION PROCESS THAT WAS NOT SHOWN ON THE CONTRACT DOCUMENTS SHALL BE BROUGHT TO THE ATTENTION OF THE ENGINEER.
2. THE CONTRACTOR SHALL VERIFY THE CONCRETE REPAIR DIMENSIONS.
3. ALL CONTAMINATED CONCRETE CONTAINING ANY OIL, DIRT, ETC. SHALL BE REMOVED. THE CONTRACTOR SHALL TAKE NECESSARY PRECAUTIONS TO AVOID DAMAGING THE UNDERLYING SOUND CONCRETE.
4. THE DEFECTIVE CONCRETE SHALL BE SQUARED BY SAW-CUTTING AND CHIPPING THE CONCRETE AT THE PERIMETER BEYOND THE REMOVAL AREA A MINIMUM OF 1-INCH TO ATTAIN A 1 1/2" INCH MINIMUM DEPTH AND TO PREVENT FEATHER EDGE CONDITIONS. EXERCISE GREAT CARE TO AVOID VIBRATING, CUTTING OR DAMAGING ANY EXISTING EMBEDDED STEEL REINFORCING. ANGLES BETWEEN ADJACENT SAW-CUTS AROUND THE PERIMETER SHALL NOT BE LESS THAN 90 DEGREES AND THE SHAPE OF EACH PATCH SHALL NOT BE IRREGULAR.
5. THE CONTRACTOR SHALL NOT SAW-CUT BEYOND THE REPAIR LIMITS.
6. EXISTING CONCRETE SURFACES WITHIN THE REPAIR AREA SHALL BE ROUGHENED TO ENSURE PROPER ADHESION. FOLLOW MANUFACTURER'S RECOMMENDATIONS FOR FURTHER SURFACE PREPARATION.

REVISION NO.	SYM.	DESCRIPTION	SHT./OF	DATE	APPROVED

RUSS S. MIYAHARA LICENSED PROFESSIONAL ENGINEER NO. 9444-S HAWAII, U.S.A.

THIS WORK WAS PREPARED BY ME OR UNDER MY SUPERVISION.

SIGNATURE — EXPIRATION DATE OF THE LICENSE 4-30-26

STATE OF HAWAII
DEPARTMENT OF LAND AND NATURAL RESOURCES
DIVISION OF BOATING AND OCEAN RECREATION

KIKIALOA SMALL BOAT HARBOR
NEW BOAT RAMP

CONCRETE DEMO DETAILS

DESIGNED:	SUBMITTED: --
DRAWN: JF	DATE: 5/3/2024
CHECKED:	SCALE: AS NOTED
APPROVED:	DRAWING NO. S-301
CHIEF ENGINEER	DATE

POH-2024-00105, Waimea Bay
Hawaii Department of Land and Natural Resources
- New Boat Ramp at Kikiaola Small Boat Harbor
Drawings dated May 06, 2025
Sheet 31 of 36

JOB NO. B95CK72A SHEET NO. 30 OF 35 SHEETS

DRAWING NAME: Z:\00 ONGOING\00 JF PROJECTS\23-019 KIKIAOLA BOAT RAMP-HDR\01 CAD\05-03-24 NEW BDR\KIKA-S0301 CONC RPR DET.DWG PLOT TIME: 05-03-24, 2:38 PM)

MAY 3, 2024

KIKIAOLA SMALL BOAT HARBOR NEW BOAT RAMP

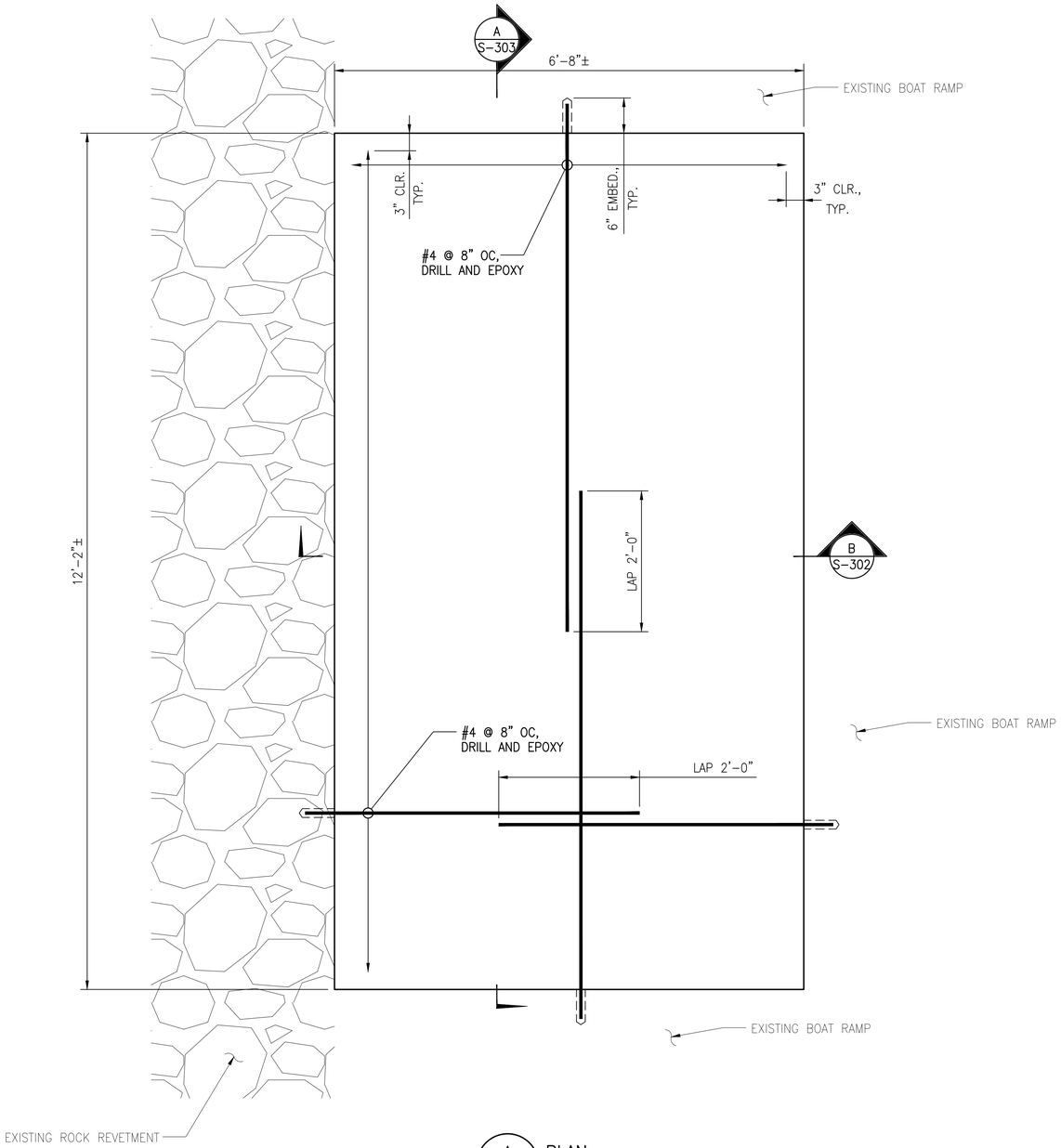

A S-302 PLAN
SCALE: 1" = 1'-0"

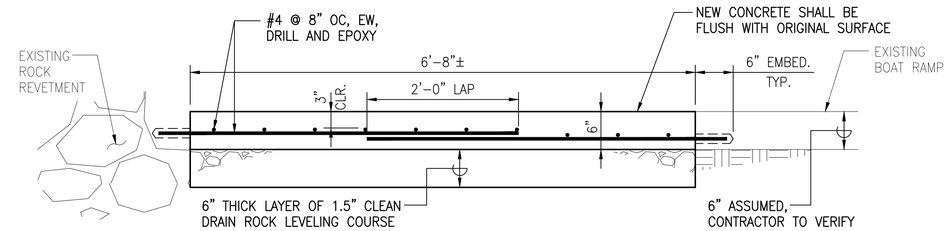

B S-302 SECTION
SCALE: 1" = 1'-0"

POH-2024-00105, Waimea Bay
Hawaii Department of Land and Natural Resources
- New Boat Ramp at Kikiaola Small Boat Harbor
Drawings dated May 06, 2025
Sheet 32 of 36

REVISION NO.	SYM.	DESCRIPTION	SHT./OF	DATE	APPROVED

RUSS S. MIYAHARA
LICENSED PROFESSIONAL ENGINEER
NO. 9444-S
HAWAII, U.S.A.

THIS WORK WAS PREPARED BY ME OR UNDER MY SUPERVISION.

SIGNATURE — EXPIRATION DATE OF THE LICENSE: 4-30-26

STATE OF HAWAII
DEPARTMENT OF LAND AND NATURAL RESOURCES
DIVISION OF BOATING AND OCEAN RECREATION

KIKIALOA SMALL BOAT HARBOR
NEW BOAT RAMP

CONCRETE REPAIR DETAILS

DESIGNED:
SUBMITTED: --
DRAWN: JF
DATE: 5/3/2024
CHECKED:
SCALE: AS NOTED
APPROVED:
CHIEF ENGINEER — DATE
DRAWING NO. S-302

MAY 3, 2024

KIKIAOLA SMALL BOAT HARBOR NEW BOAT RAMP

DRAWING NAME: Z:\00 ONGOING\00 JF PROJECTS\23-019 KIKIAOLA BOAT RAMP-HDR\01 CAD\05-03-24 NEW BDR\KIKA-S0301 CONC RPR DET.DWG PLOT TIME: 05-03-24, 2:39 PM)

JOB NO. B95CK72A SHEET NO. 31 OF 35 SHEETS

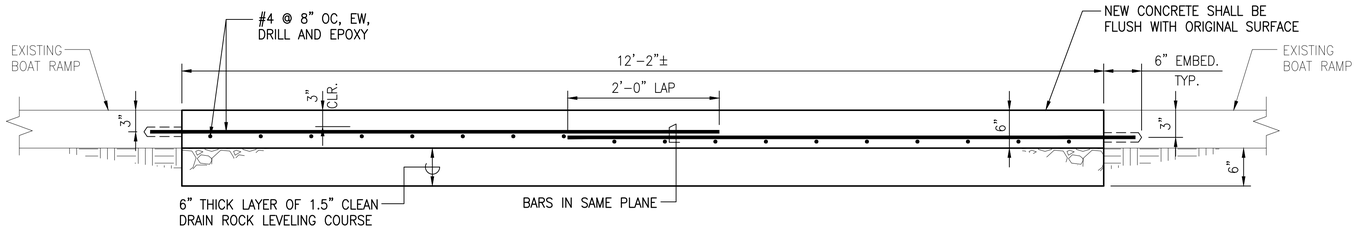

A
S-303
SECTION
SCALE: 1" = 1'-0"

REVISION NO.	SYM.	DESCRIPTION	SHT./OF	DATE	APPROVED

LICENSED PROFESSIONAL ENGINEER
RUSS S. MIYAHARA
NO. 9444-S
HAWAII, U.S.A.

THIS WORK WAS PREPARED BY ME OR UNDER MY SUPERVISION.

SIGNATURE — EXPIRATION DATE OF THE LICENSE 4-30-26

STATE OF HAWAII
DEPARTMENT OF LAND AND NATURAL RESOURCES
DIVISION OF BOATING AND OCEAN RECREATION

KIKIALOA SMALL BOAT HARBOR
NEW BOAT RAMP

CONCRETE REPAIR SECTION

DESIGNED:	SUBMITTED: --
DRAWN: JF	DATE: 5/3/2024
CHECKED:	SCALE: AS NOTED
APPROVED: CHIEF ENGINEER — DATE	DRAWING NO. S-303

POH-2024-00105, Waimea Bay
Hawaii Department of Land and Natural Resources
- New Boat Ramp at Kikiaola Small Boat Harbor
Drawings dated May 06, 2025
Sheet 33 of 36

DRAWING NAME: Z:\00 ONGOING\00 JF PROJECTS\23-019 KIKIAOLA BOAT RAMP-HDR\01 CAD\05-03-24 NEW BDR\KIKA-S0301 CONC RPR DET.DWG PLOT TIME: 05-03-24, 2:39 PM)

MAY 3, 2024

KIKIAOLA SMALL BOAT HARBOR NEW BOAT RAMP

NOTE:

SEE CIVIL DRAWINGS FOR ADDITIONAL INFORMATION.

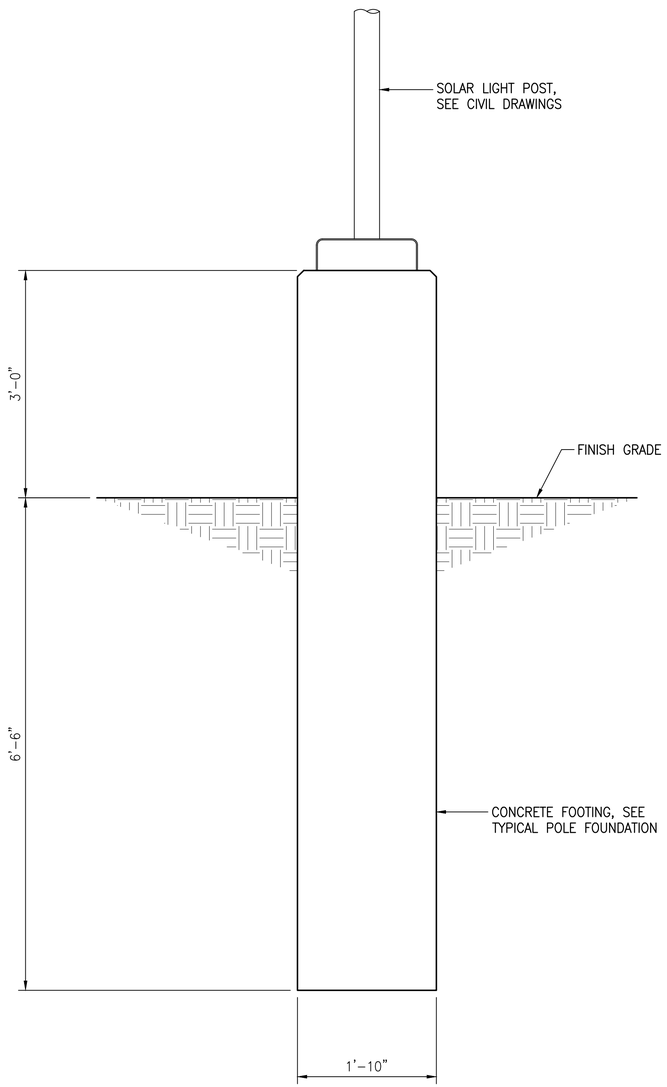

A S-401 SOLAR LIGHT POST
SCALE: 1" = 1'-0"

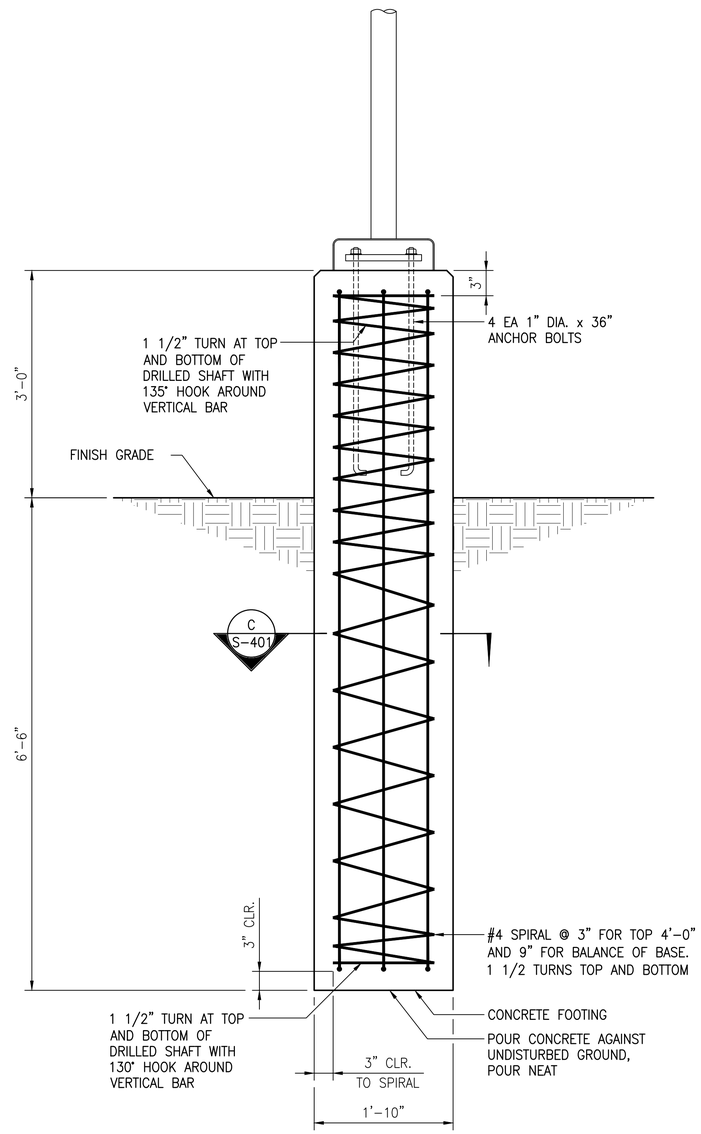

B S-401 TYPICAL POLE FOUNDATION
SCALE: 1" = 1'-0"

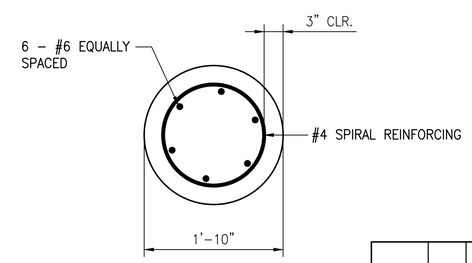

C S-401 SECTION
SCALE: 1" = 1'-0"

REVISION NO.	SYM.	DESCRIPTION	SHT./OF	DATE	APPROVED

RUSS S. MIYAHARA
LICENSED PROFESSIONAL ENGINEER
NO. 9444-S
HAWAII, U.S.A.

THIS WORK WAS PREPARED BY ME OR UNDER MY SUPERVISION.

SIGNATURE — EXPIRATION DATE OF THE LICENSE 4-30-26

STATE OF HAWAII
DEPARTMENT OF LAND AND NATURAL RESOURCES
DIVISION OF BOATING AND OCEAN RECREATION

KIKIALOA SMALL BOAT HARBOR
NEW BOAT RAMP

SOLAR LIGHT POST DETAILS

DESIGNED:	SUBMITTED: --
DRAWN:	DATE: 5/3/2024
CHECKED:	SCALE: AS NOTED
APPROVED: CHIEF ENGINEER — DATE	DRAWING NO. S-401

POH-2024-00105, Waimea Bay
Hawaii Department of Land and Natural Resources
- New Boat Ramp at Kikiaola Small Boat Harbor
Drawings dated May 06, 2025
Sheet 34 of 36

MAY 3, 2024

KIKIAOLA SMALL BOAT HARBOR NEW BOAT RAMP

DRAWING NAME: Z:\00 ONGOING\00 JF PROJECTS\23-019 KIKIAOLA BOAT RAMP-HDR\01 CAD\05-03-24 NEW BDR\KIKA-S0401 LIGHT POLE.DWG PLOT TIME: 05-03-24, 2:39 PM)

UNIFIED SOIL CLASSIFICATION SYSTEM (USCS)

MAJOR DIVISIONS			USCS	TYPICAL DESCRIPTIONS
COARSE-GRAINED SOILS MORE THAN 50% OF MATERIAL RETAINED ON NO. 200 SIEVE	GRAVELS MORE THAN 50% OF COARSE FRACTION RETAINED ON NO. 4 SIEVE	CLEAN GRAVELS LESS THAN 5% FINES	GW	WELL-GRADED GRAVELS, GRAVEL-SAND MIXTURES, LITTLE OR NO FINES
			GP	POORLY-GRADED GRAVELS, GRAVEL-SAND MIXTURES, LITTLE OR NO FINES
		GRAVELS WITH FINES MORE THAN 12% FINES	GM	SILTY GRAVELS, GRAVEL-SAND-SILT MIXTURES
			GC	CLAYEY GRAVELS, GRAVEL-SAND-CLAY MIXTURES
	SANDS 50% OR MORE OF COARSE FRACTION PASSING THROUGH NO. 4 SIEVE	CLEAN SANDS LESS THAN 5% FINES	SW	WELL-GRADED SANDS, GRAVELLY SANDS, LITTLE OR NO FINES
			SP	POORLY-GRADED SANDS, GRAVELLY SANDS, LITTLE OR NO FINES
		SANDS WITH FINES MORE THAN 12% FINES	SM	SILTY SANDS, SAND-SILT MIXTURES
			SC	CLAYEY SANDS, SAND-CLAY MIXTURES
FINE-GRAINED SOILS 50% OR MORE OF MATERIAL PASSING THROUGH NO. 200 SIEVE	SILTS AND CLAYS LIQUID LIMIT LESS THAN 50		ML	INORGANIC SILTS AND VERY FINE SANDS, ROCK FLOUR, SILTY OR CLAYEY FINE SANDS OR CLAYEY SILTS WITH SLIGHT PLASTICITY
			CL	INORGANIC CLAYS OF LOW TO MEDIUM PLASTICITY, GRAVELLY CLAYS, SANDY CLAYS, SILTY CLAYS, LEAN CLAYS
			OL	ORGANIC SILTS AND ORGANIC SILTY CLAYS OF LOW PLASTICITY
	SILTS AND CLAYS LIQUID LIMIT 50 OR MORE		MH	INORGANIC SILT, MICACEOUS OR DIATOMACEOUS FINE SAND OR SILTY SOILS
			CH	INORGANIC CLAYS OF HIGH PLASTICITY
			OH	ORGANIC CLAYS OF MEDIUM TO HIGH PLASTICITY, ORGANIC SILTS
HIGHLY ORGANIC SOILS			PT	PEAT, HUMUS, SWAMP SOILS WITH HIGH ORGANIC CONTENTS

NOTE: DUAL SYMBOLS ARE USED TO INDICATE BORDERLINE SOIL CLASSIFICATIONS

LEGEND

- (2-INCH) O.D. STANDARD PENETRATION TEST
- (3-INCH) O.D. MODIFIED CALIFORNIA SAMPLE
- SHELBY TUBE SAMPLE
- GRAB SAMPLE
- CORE SAMPLE
- WATER LEVEL OBSERVED IN BORING AT TIME OF DRILLING
- WATER LEVEL OBSERVED IN BORING AFTER DRILLING
- WATER LEVEL OBSERVED IN BORING OVERNIGHT

LL LIQUID LIMIT (NP=NON-PLASTIC)

PI PLASTICITY INDEX (NP=NON-PLASTIC)

TV TORVANE SHEAR (tsf)

UC UNCONFINED COMPRESSION OR UNIAXIAL COMPRESSIVE STRENGTH

TXUU UNCONSOLIDATED UNDRAINED TRIAXIAL COMPRESSION (ksf)

LOG LEGEND FOR SOIL 8739-00.GPJ GEOLABS.GDT 9/12/23

Plate A-0.1

GEOLABS, INC. CLASSIFICATION*

GRANULAR SOIL (- #200 <50%)	COHESIVE SOIL (- #200 ≥50%)
• PRIMARY constituents are composed of the largest percent of the soil mass. Primary constituents are capitalized and bold (i.e., GRAVEL, SAND)	• PRIMARY constituents are based on plasticity. Primary constituents are capitalized and bold (i.e., CLAY, SILT)
• SECONDARY constituents are composed of a percentage less than the primary constituent. If the soil mass consists of 12 percent or more fines content, a cohesive constituent is used (SILTY or CLAYEY); otherwise, a granular constituent is used (GRAVELLY or SANDY) provided that the secondary constituent consists of 20 percent or more of the soil mass. Secondary constituents are capitalized and bold (i.e., SANDY GRAVEL, CLAYEY SAND) and precede the primary constituent.	• SECONDARY constituents are composed of a percentage less than the primary constituent, but more than 20 percent of the soil mass. Secondary constituents are capitalized and bold (i.e., SANDY CLAY, SILTY CLAY, CLAYEY SILT) and precede the primary constituent.
• accessory descriptions compose of the following: with some: >12% with a little: 5 - 12% with traces of: <5% accessory descriptions are lower cased and follow the Primary and Secondary Constituents (i.e., SILTY GRAVEL with a little sand)	• accessory descriptions compose of the following: with some: >12% with a little: 5 - 12% with traces of: <5% accessory descriptions are lower cased and follow the Primary and Secondary Constituents (i.e., SILTY CLAY with some sand)

EXAMPLE: Soil Containing 60% Gravel, 25% Sand, 15% Fines. Described as: SILTY GRAVEL with some sand

RELATIVE DENSITY / CONSISTENCY

Granular Soils			Cohesive Soils			
N-Value (Blows/Foot)		Relative Density	N-Value (Blows/Foot)		PP Readings (tsf)	Consistency
SPT	MCS		SPT	MCS		
0 - 4	0 - 7	Very Loose	0 - 2	0 - 4		Very Soft
4 - 10	7 - 18	Loose	2 - 4	4 - 7	< 0.5	Soft
10 - 30	18 - 55	Medium Dense	4 - 8	7 - 15	0.5 - 1.0	Medium Stiff
30 - 50	55 - 91	Dense	8 - 15	15 - 27	1.0 - 2.0	Stiff
> 50	> 91	Very Dense	15 - 30	27 - 55	2.0 - 4.0	Very Stiff
			> 30	> 55	> 4.0	Hard

MOISTURE CONTENT DEFINITIONS

Dry: Absence of moisture, dry to the touch

Moist: Damp but no visible water

Wet: Visible free water

ABBREVIATIONS

WOH: Weight of Hammer

WOR: Weight of Drill Rods

SPT: Standard Penetration Test Split-Spoon Sampler

MCS: Modified California Sampler

PP: Pocket Penetrometer

GRAIN SIZE DEFINITION

Description	Sieve Number and / or Size
Boulders	> 12 inches (305-mm)
Cobbles	3 to 12 inches (75-mm to 305-mm)
Gravel	3-inch to #4 (75-mm to 4.75-mm)
Coarse Gravel	3-inch to 3/4-inch (75-mm to 19-mm)
Fine Gravel	3/4-inch to #4 (19-mm to 4.75-mm)
Sand	#4 to #200 (4.75-mm to 0.075-mm)
Coarse Sand	#4 to #10 (4.75-mm to 2-mm)
Medium Sand	#10 to #40 (2-mm to 0.425-mm)
Fine Sand	#40 to #200 (0.425-mm to 0.075-mm)

*Soil descriptions are based on ASTM D2488-09a, Visual-Manual Procedure, with the above modifications by Geolabs, Inc. to the Unified Soil Classification System (USCS).

SOIL_CLASS_LOG_KEY 8739-00.GPJ GEOLABS.GDT 9/12/23

Plate A-0.2

ROCK DESCRIPTIONS

	BASALT		CONGLOMERATE
	BOULDERS		LIMESTONE
	BRECCIA		SANDSTONE
	CLINKER		SILTSTONE
	COBBLES		TUFF
	CORAL		VOID/CAVITY

ROCK DESCRIPTION SYSTEM

ROCK FRACTURE CHARACTERISTICS

The following terms describe general fracture spacing of a rock:

Massive:	Greater than 24 inches apart
Slightly Fractured:	12 to 24 inches apart
Moderately Fractured:	6 to 12 inches apart
Closely Fractured:	3 to 6 inches apart
Severely Fractured:	Less than 3 inches apart

DEGREE OF WEATHERING

The following terms describe the chemical weathering of a rock:

Unweathered:	Rock shows no sign of discoloration or loss of strength.
Slightly Weathered:	Slight discoloration inwards from open fractures.
Moderately Weathered:	Discoloration throughout and noticeably weakened though not able to break by hand.
Highly Weathered:	Most minerals decomposed with some corestones present in residual soil mass. Can be broken by hand.
Extremely Weathered:	Saprolite. Mineral residue completely decomposed to soil but fabric and structure preserved.

HARDNESS

The following terms describe the resistance of a rock to indentation or scratching:

Very Hard:	Specimen breaks with difficulty after several "pinging" hammer blows. Example: Dense, fine grain volcanic rock
Hard:	Specimen breaks with some difficulty after several hammer blows. Example: Vesicular, vugular, coarse-grained rock
Medium Hard:	Specimen can be broked by one hammer blow. Cannot be scraped by knife. SPT may penetrate by ~25 blows per inch with bounce. Example: Porous rock such as clinker, cinder, and coral reef
Soft:	Can be indented by one hammer blow. Can be scraped or peeled by knife. SPT can penetrate by ~100 blows per foot. Example: Weathered rock, chalk-like coral reef
Very Soft:	Crumbles under hammer blow. Can be peeled and carved by knife. Can be indented by finger pressure. Example: Saprolite

LOG LEGEND FOR ROCK 8671-00.GPJ GEOLABS.GDT 8/10/23

Plate A-0.3

MAY 3, 2024

REVISION NO.	SYM.	DESCRIPTION	SHT./OF	DATE	APPROVED

STATE OF HAWAII
DEPARTMENT OF LAND AND NATURAL RESOURCES
DIVISION OF BOATING AND OCEAN RECREATION

KIKIALOA SMALL BOAT HARBOR
NEW BOAT RAMP

BORING NOTES

THIS WORK WAS PREPARED BY ME OR UNDER MY SUPERVISION AND CONSTRUCTION OF THIS PROJECT WILL BE UNDER MY OBSERVATION.

SIGNATURE — EXP. DATE OF THE LICENSE 4/30/2026

DESIGNED: CT, DK — SUBMITTED:
DRAWN: CT, DK, EU — DATE: 5/3/2024
CHECKED: CN — SCALE: AS NOTED
APPROVED: — CHIEF ENGINEER — DATE
DRAWING NO. B-101

KIKIAOLA SMALL BOAT HARBOR NEW BOAT RAMP

DATE: 05/02/2024 PM: KO
SCALE: AS SHOWN OPER: CTANGONAN
FILE: B95CK72A-00B-001.dwg REVISED 05/03/2024

POH-2024-00105, Waimea Bay
Hawaii Department of Land and Natural Resources
- New Boat Ramp at Kikiaola Small Boat Harbor
Drawings dated May 06, 2025
Sheet 35 of 36

GEOLABS, INC.
Geotechnical Engineering

KIKIAOLA SMALL BOAT HARBOR - BOAT RAMP REPLACEMENT
KEKAHA, KAUAI, HAWAII

Log of Boring
B-1

Approximate Ground Surface Elevation : N/A

Other Tests (Laboratory)	Moisture Content (%)	Dry Density (pcf)	Core Recovery (%)	RQD (%)	Penetration Resistance (blows/foot)	Pocket Pen. (tsf)	Depth (feet)	USCS	Description
	20	98			32			SM	Grayish brown SILTY SAND, medium dense, moist (fill)
	6				10			SM	Brownish gray SILTY SAND with some gravel, loose to medium dense (beach deposit)
Sieve - #200 = 30.2%	23	107			20		5		
									grades to more sandy
Sieve - #200 = 6.0%	25				6		10		
Direct Shear	20	111			13		15		
								SM	Light gray SILTY GRAVEL, very loose (coralline detritus)
Sieve - #200 = 29.8%	45				2		20		
									Boring terminated at 21.5 feet
							25		
							30		
							35		

Date Started:	August 7, 2023	Water Level: ∇ 8.0 ft. 08/08/2023 1139 HRS	Plate
Date Completed:	August 8, 2023		
Logged By:	S. Leong	Drill Rig: CME-45C TRUCK (Energy Transfer Ratio = 86.4%)	A - 1
Total Depth:	21.5 feet	Drilling Method: 6" Hollow-Stem Auger	
Work Order:	8739-00	Driving Energy: 140 lb. wt., 30 in. drop	

BORING_LOG 8739-00.GPJ GEOLABS.GDT 9/12/23

GEOLABS, INC.
Geotechnical Engineering

KIKIAOLA SMALL BOAT HARBOR - BOAT RAMP REPLACEMENT
KEKAHA, KAUAI, HAWAII

Log of Boring
B-2

Approximate Ground Surface Elevation : N/A

Other Tests (Laboratory)	Moisture Content (%)	Dry Density (pcf)	Core Recovery (%)	RQD (%)	Penetration Resistance (blows/foot)	Pocket Pen. (tsf)	Depth (feet)	USCS	Description
	7	111			25			SM	Brown SILTY SAND with a little gravel, medium dense, moist (fill)
Sieve - #200 = 2.7%	4				8			SP	Brownish gray SAND with traces of silt, loose to medium dense (beach deposit)
Direct Shear	11	114			22		5		
	18				10		10		
Direct Shear	32	98			17		15		
								SM	Light gray SILTY SAND with some gravel, loose, moist (coralline detritus)
Sieve - #200 = 20.9%	43				4		20		
								SM	Whitish tan SILTY SAND with a little gravel, medium dense, moist (coral formation)
	34	100			49		25		
Sieve - #200 = 44.5%	35				28		30		
									Boring terminated at 31.5 feet
							35		

Date Started:	August 8, 2023	Water Level: ∇ 7.5 ft. 08/08/2023 1315 HRS	Plate
Date Completed:	August 8, 2023		
Logged By:	S. Leong	Drill Rig: CME-45C TRUCK (Energy Transfer Ratio = 86.4%)	A - 2
Total Depth:	31.5 feet	Drilling Method: 6" Hollow-Stem Auger	
Work Order:	8739-00	Driving Energy: 140 lb. wt., 30 in. drop	

BORING_LOG 8739-00.GPJ GEOLABS.GDT 9/12/23

MAY 3, 2024

KIKIAOLA SMALL BOAT HARBOR NEW BOAT RAMP

DATE: 05/02/2024 PM: KO
SCALE: AS SHOWN OPER: CTANGONAN
FILE: B95CK72A-00B-001.dwg REVISED 05/03/2024

POH-2024-00105, Waimea Bay
Hawaii Department of Land and Natural Resources
- New Boat Ramp at Kikiaola Small Boat Harbor
Drawings dated May 06, 2025
Sheet 36 of 36

REVISION NO.	SYM.	DESCRIPTION	SHT./OF	DATE	APPROVED

STATE OF HAWAII
DEPARTMENT OF LAND AND NATURAL RESOURCES
DIVISION OF BOATING AND OCEAN RECREATION

KIKIALOA SMALL BOAT HARBOR
NEW BOAT RAMP

BORING LOGS

THIS WORK WAS PREPARED BY ME OR UNDER MY SUPERVISION AND CONSTRUCTION OF THIS PROJECT WILL BE UNDER MY OBSERVATION.

SIGNATURE — EXP. DATE OF THE LICENSE 4/30/2026

DESIGNED: CT, DK	SUBMITTED:
DRAWN: CT, DK, EU	DATE: 5/3/2024
CHECKED: CN	SCALE: AS NOTED
APPROVED:	DRAWING NO. B-102

CHIEF ENGINEER — DATE

JOB NO. B95CK72A SHEET NO. 35 OF 35 SHEETS